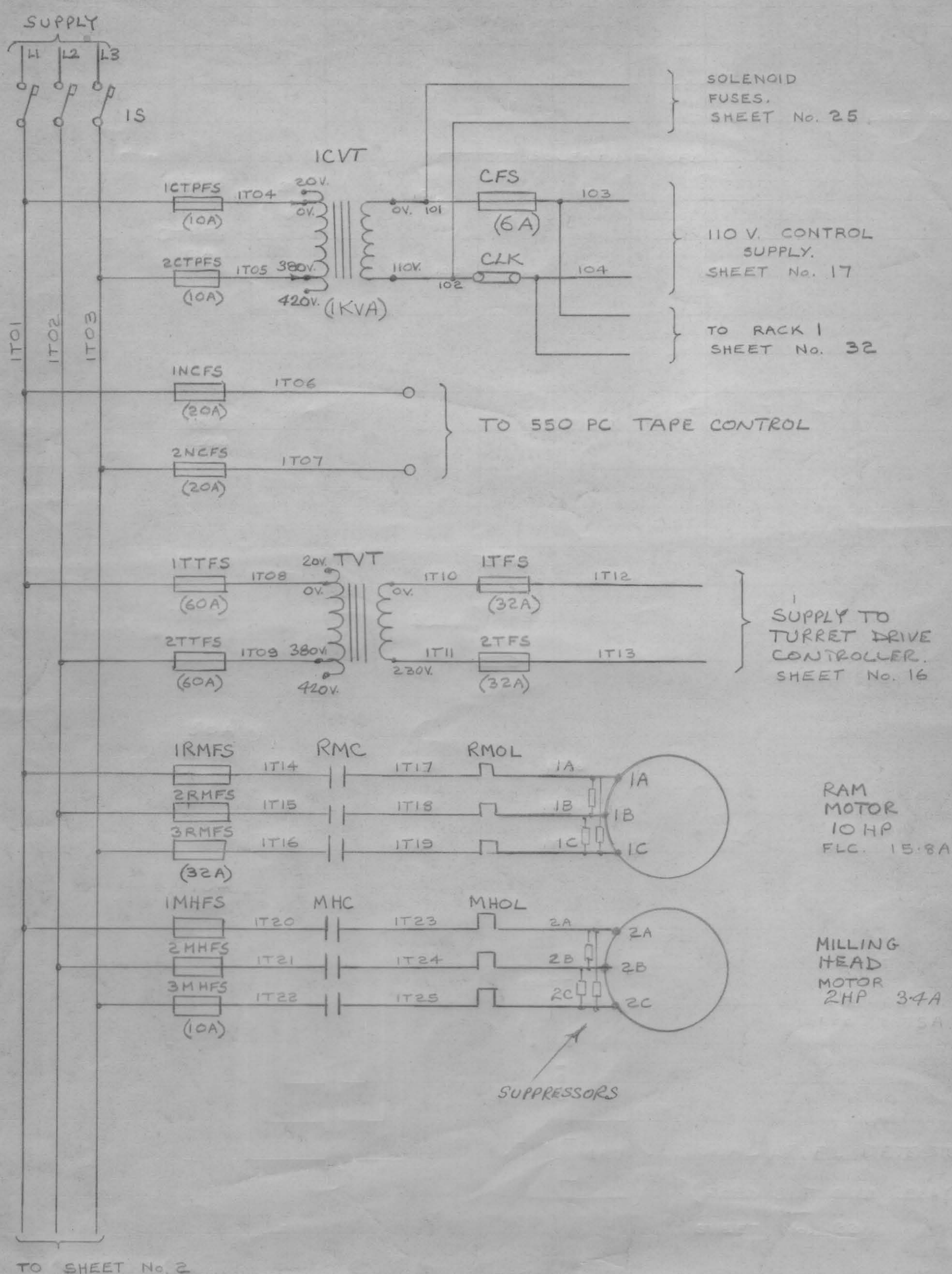


| TECHN. | ENG. | APPD. | TECHN. RKW | ENG. | APPD. | DATE 27-2-78 | ALLENWEST | AC MAIN CIRCUITS. | IDENT |
|---|---|---|---|---|---|---|---|---|---|
| | | | 2 | | 12-6-78 | TECHN. RKW | Simplex GE | 60 TON TURRET PUNCH PRESS | DR / SH 1 |
| | | | | | | ENG. FRS | VARIABLE SPEED DRIVES OPERATION, BRIGHTON, ENGLAND. | SCOTTISH MACHINE TOOL CORP. | |
| | | | | | | APPD. | | GO NUMBER 722N08 / ELEMENTARY DIAGRAM 902M102XD / CONTD. 2 | |

DR SH 1 CONTD. 2 ELEMENTARY DIAGRAM 902M102XD

Disclaimer Statement The GE trade mark is the trade mark of General Electric Company of U.S.A. which is not connected with the English Company of similar

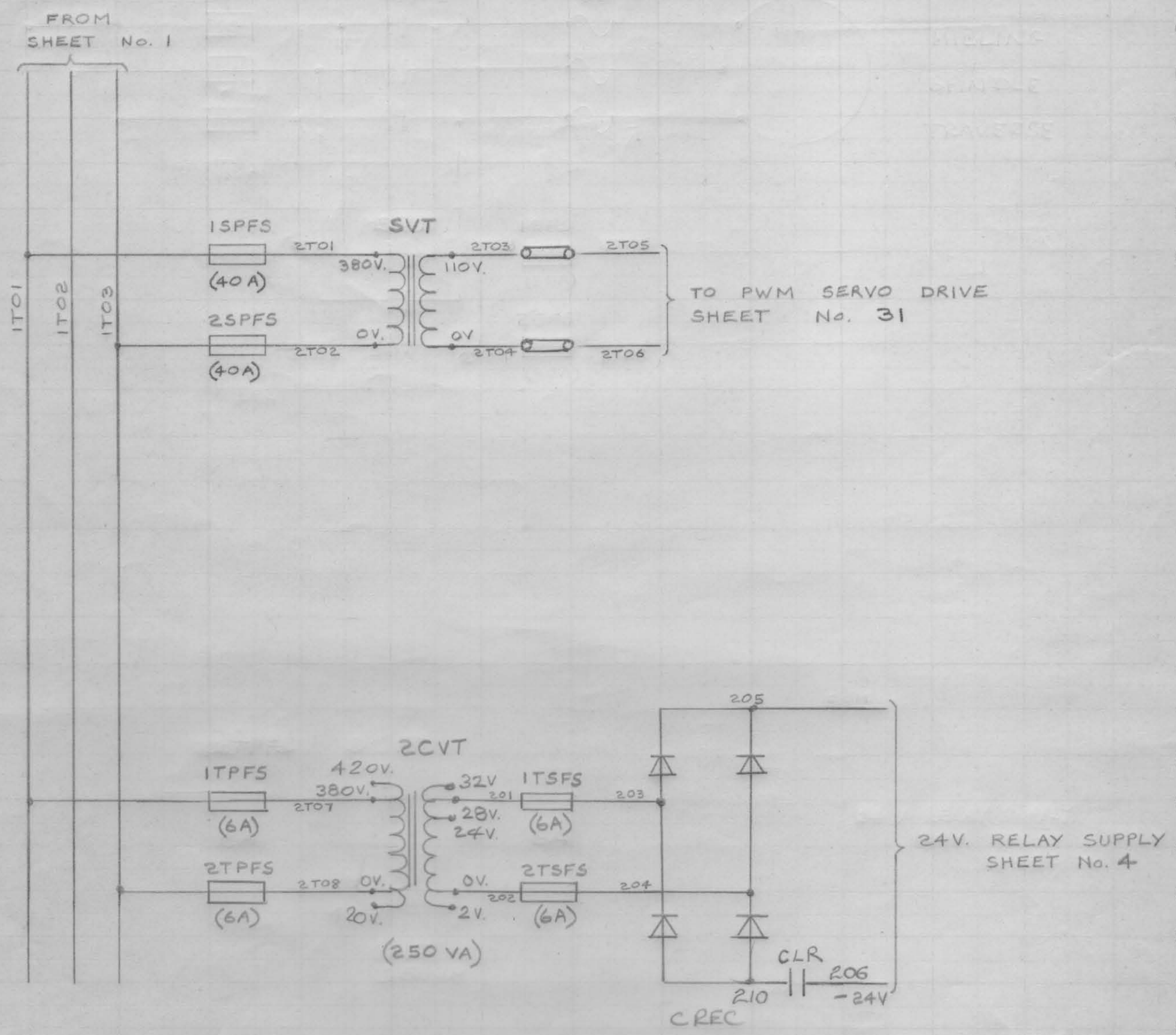


DR | SH 2 | CONTD. 3 | ELEMENTARY DIAGRAM 902M102XD

| TECHN. | ENG. | APPD. | TECHN. | ENG. | APPD. | DATE 27-2-78 |
|---|---|---|---|---|---|---|
| | | | 2 | | 12.6.78 | TECHN. RKW |
| | | | | | | ENG. FRS |
| | | | | | | APPD. |

ALLENWEST
Simplex
VARIABLE SPEED DRIVES OPERATION, BRIGHTON, ENGLAND.

AC MAIN CIRCUITS.
60 TON TURRET PUNCH PRESS
SCOTTISH MACHINE TOOL CORP.

| GO NUMBER | ELEMENTARY DIAGRAM | CONTD. |
|---|---|---|
| 722N08 | 902M102XD | 3 |

IDENT | DR | SH 2

Disclaimer Statement The trade mark is the trade mark of General Electric Company of U.S.A. which is not connected with the English Company of a similar name.

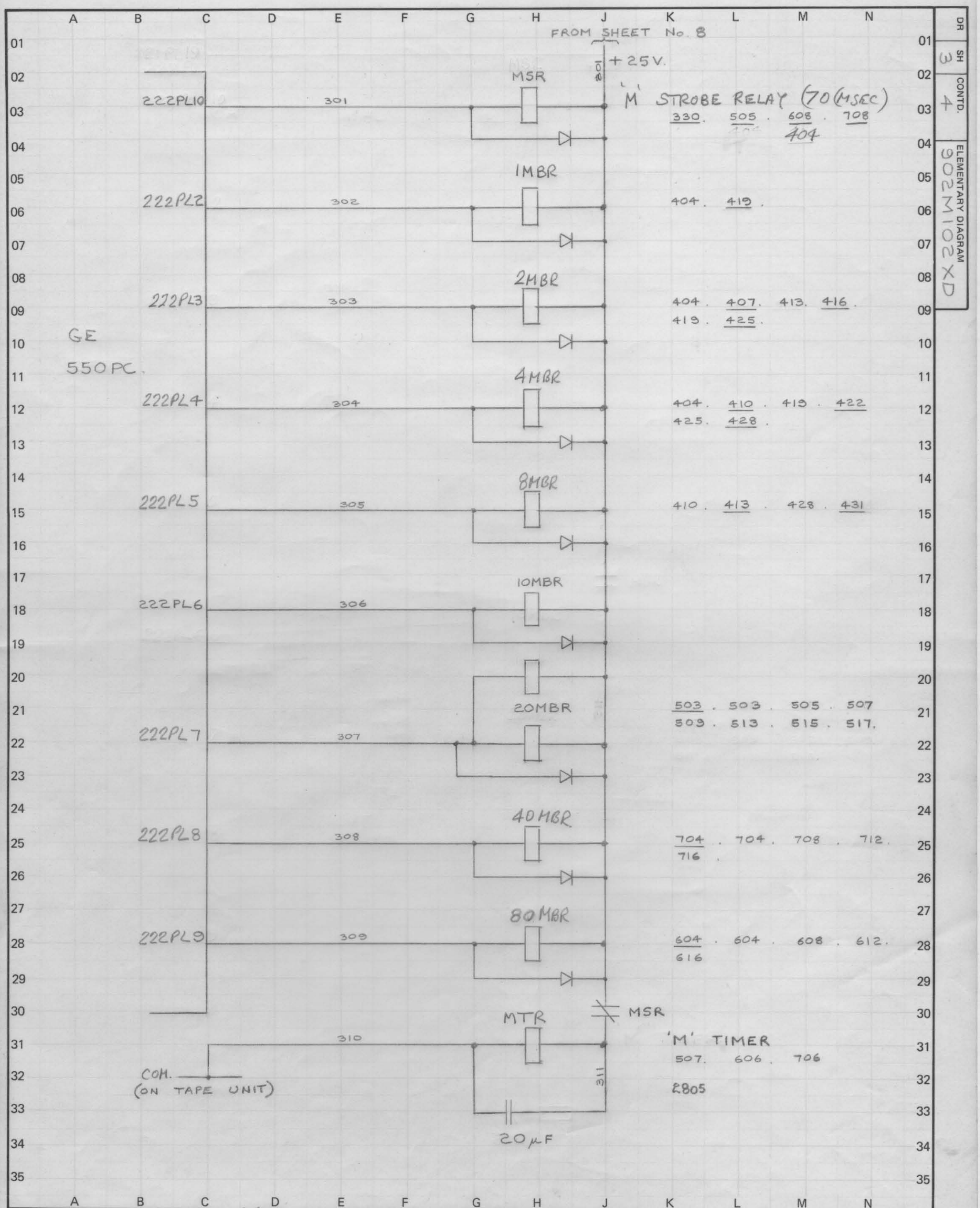


| TECHN. | ENG. | APPD. | TECHN. | ENG. | APPD. | DATE 27-2-78 | ALLENWEST Simplex | 'M' FUNCTION BINARY RELAYS. 60 TON TURRET PUNCH PRESS. SCOTTISH MACHINE TOOL CORP. | IDENT |
|---|---|---|---|---|---|---|---|---|---|
| | | | 2 | | 12-6-78 | TECHN. RKW | VARIABLE SPEED DRIVES OPERATION, BRIGHTON, ENGLAND. | GO NUMBER 722N08 | ELEMENTARY DIAGRAM 902M102XD |
| | | | | | | ENG. FRS | | CONTD. 4 | DR / SH 3 |
| | | | | | | APPD. | | | |

Disclaimer Statement The GE trade mark is the trade mark of General Electric Company of U.S.A. which is not connected with the English Company of a similar name.

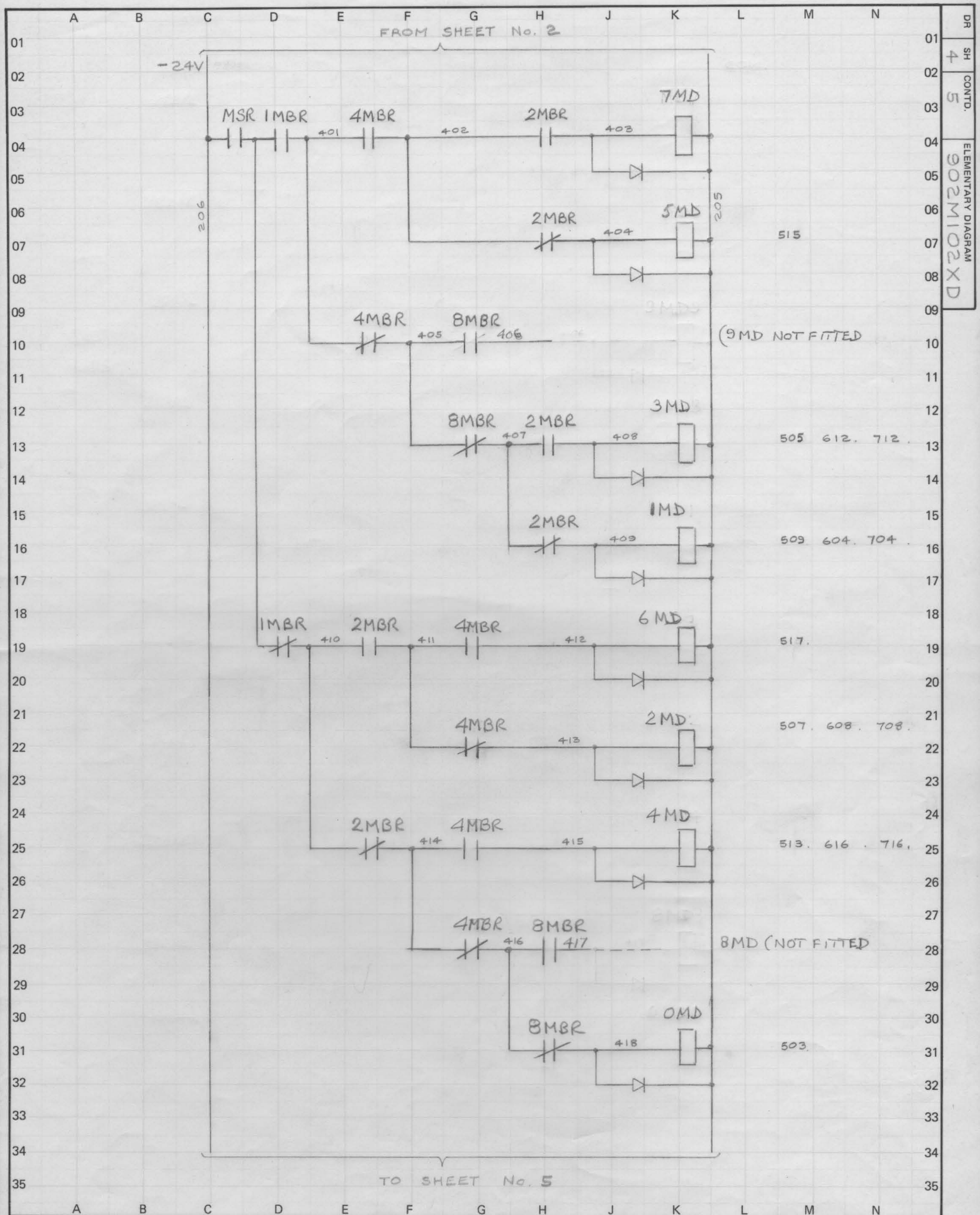


DR | SH 4 | CONTD. 5 | ELEMENTARY DIAGRAM 902M102XD

| TECHN. | ENG. | APPD. | TECHN. | ENG. | APPD. | DATE 27-2-78 |
|---|---|---|---|---|---|---|
| | | | 2 | | 12-6-78 | TECHN. RKW |
| | | | | | | ENG. FRS |
| | | | | | | APPD. |

ALLENWEST Simplex
VARIABLE SPEED DRIVES OPERATION, BRIGHTON, ENGLAND.

'M' FUNCTION DECIMAL RELAYS (UNITS)
60 TON TURRET PUNCH PRESS
SCOTTISH MACHINE TOOL CORP.

| GO NUMBER | ELEMENTARY DIAGRAM | CONTD. |
|---|---|---|
| 722N08 | 902M102XD | 5 |

IDENT | DR | SH 4

Disclaimer Statement The GE trade mark is the trade mark of General Electric Company of U.S.A. which is not connected with the English Company of a similar name.

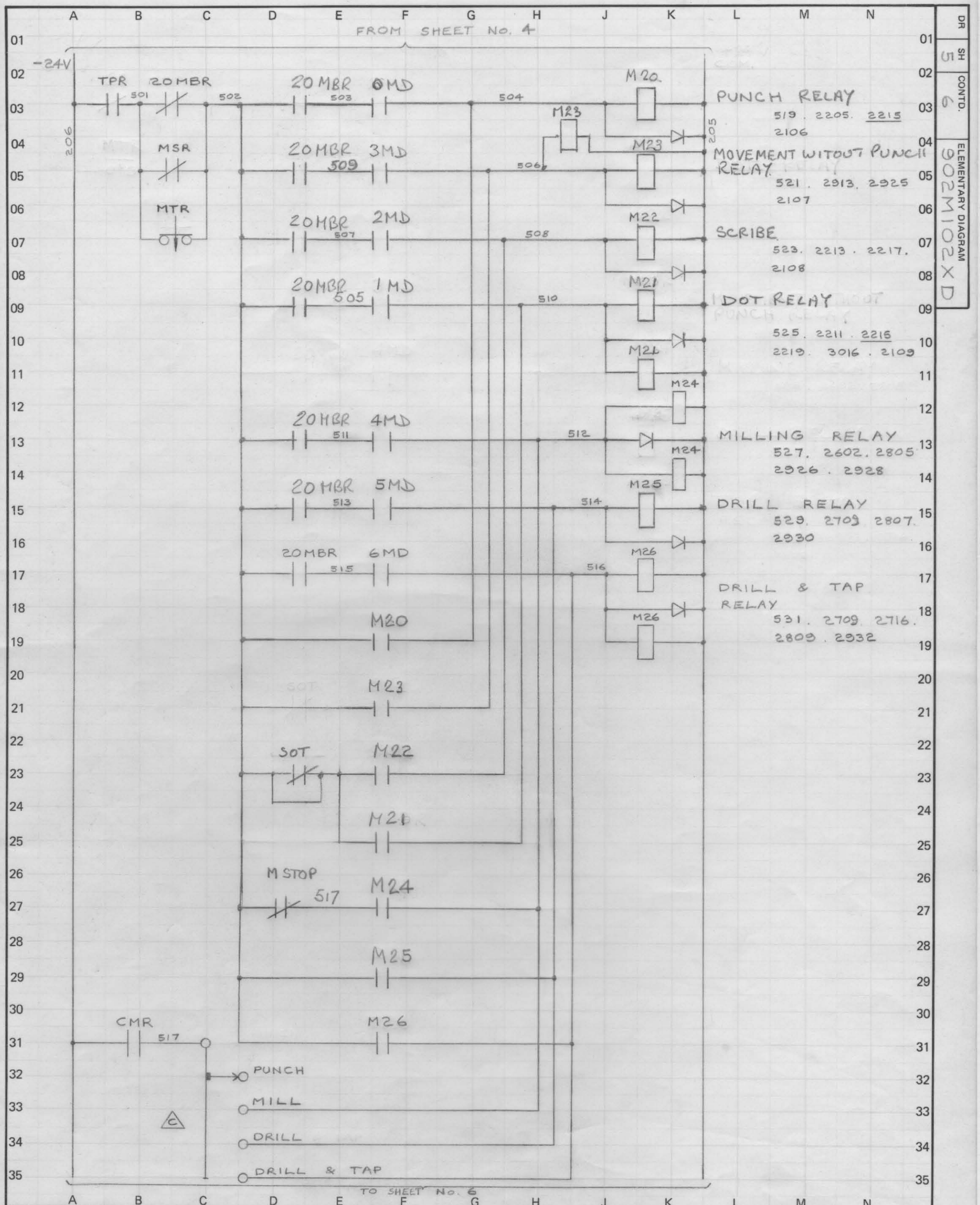


DR | SH 5 | CONTD. 6 | ELEMENTARY DIAGRAM 902M102XD

| TECHN. | ENG. | APPD. | TECHN. | ENG. | APPD. | DATE 27-2-78 | ALLENWEST Simplex | MODE SELECTION RELAYS 60 TON TURRET PUNCH PRESS SCOTTISH MACHINE TOOL CORP. | IDENT |
|---|---|---|---|---|---|---|---|---|---|
| | | | 2 | | 12-6-78 | TECHN. RKW | VARIABLE SPEED DRIVES OPERATION, BRIGHTON, ENGLAND. | GO NUMBER 722N08 | ELEMENTARY DIAGRAM 902M102XD |
| | | | | | | ENG. FRS | | CONTD. 6 | DR / SH 5 |
| | | | | | | APPD. | | | |

Disclaimer Statement The Simplex trade mark is the trade mark of General Electric Company of U.S.A. which is not connected with the English Company of similar name.

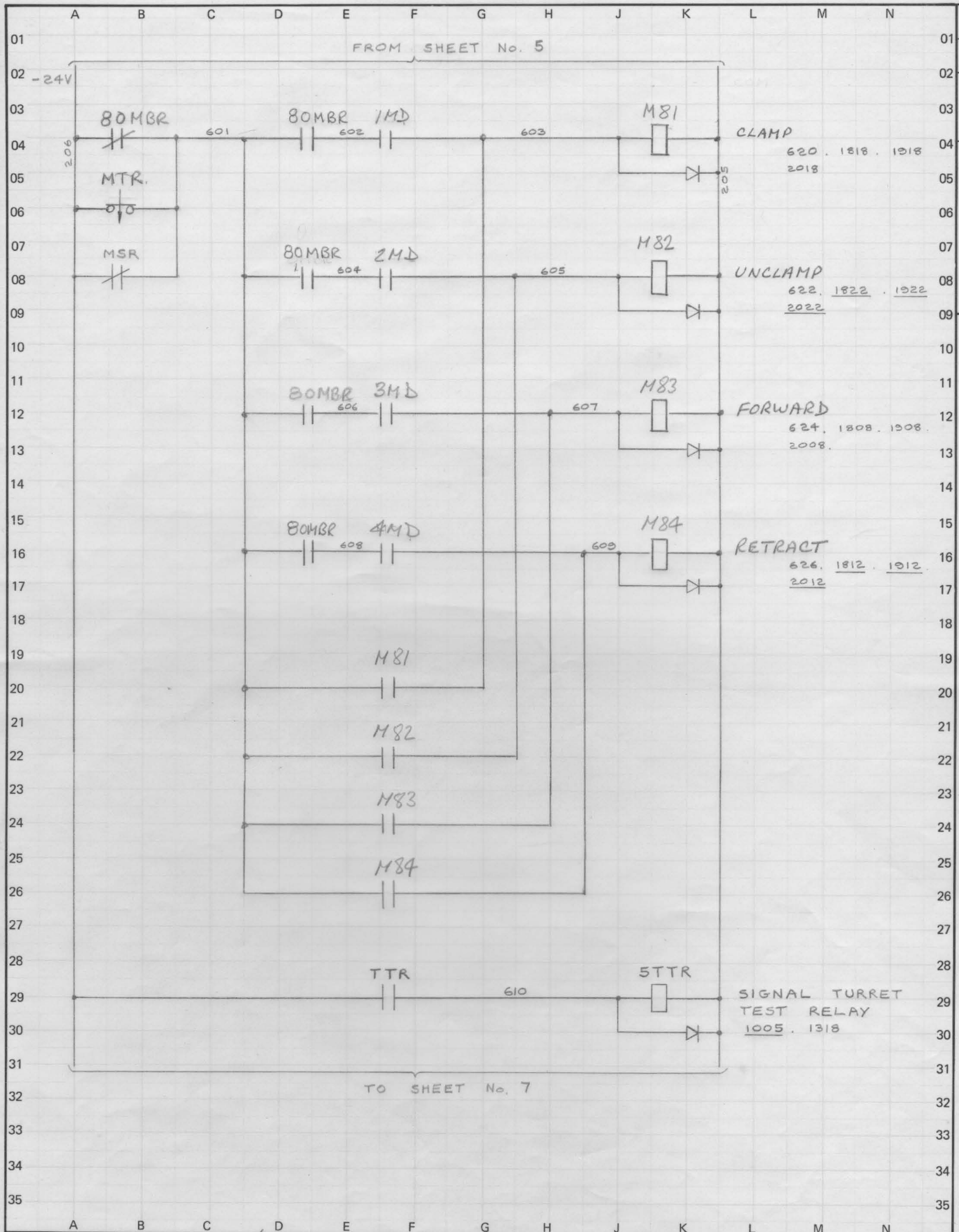


DR | SH 6 | CONTD. 7 | ELEMENTARY DIAGRAM 902M102XD

| TECHN. | ENG. | APPD. | TECHN. | ENG. | APPD. | DATE 27-2-78 | ALLENWEST Simplex | CLAMP AUTO RELAYS | IDENT |
|---|---|---|---|---|---|---|---|---|---|
| | | | 2 | | 12-6-78 | TECHN. RKW | VARIABLE SPEED DRIVES OPERATION, BRIGHTON, ENGLAND. | 60 TON TURRET PUNCH PRESS | DR / SH 6 |
| | | | | | | ENG. FRS | | SCOTTISH MACHINE TOOL CORP. | |
| | | | | | | APPD. | | GO NUMBER 722N08 / ELEMENTARY DIAGRAM 902M102XD / CONTD. 7 | |

Disclaimer Statement The GE trade mark is the trade mark of General Electric Company of U.S.A. which is not connected with the English Company of similar name.

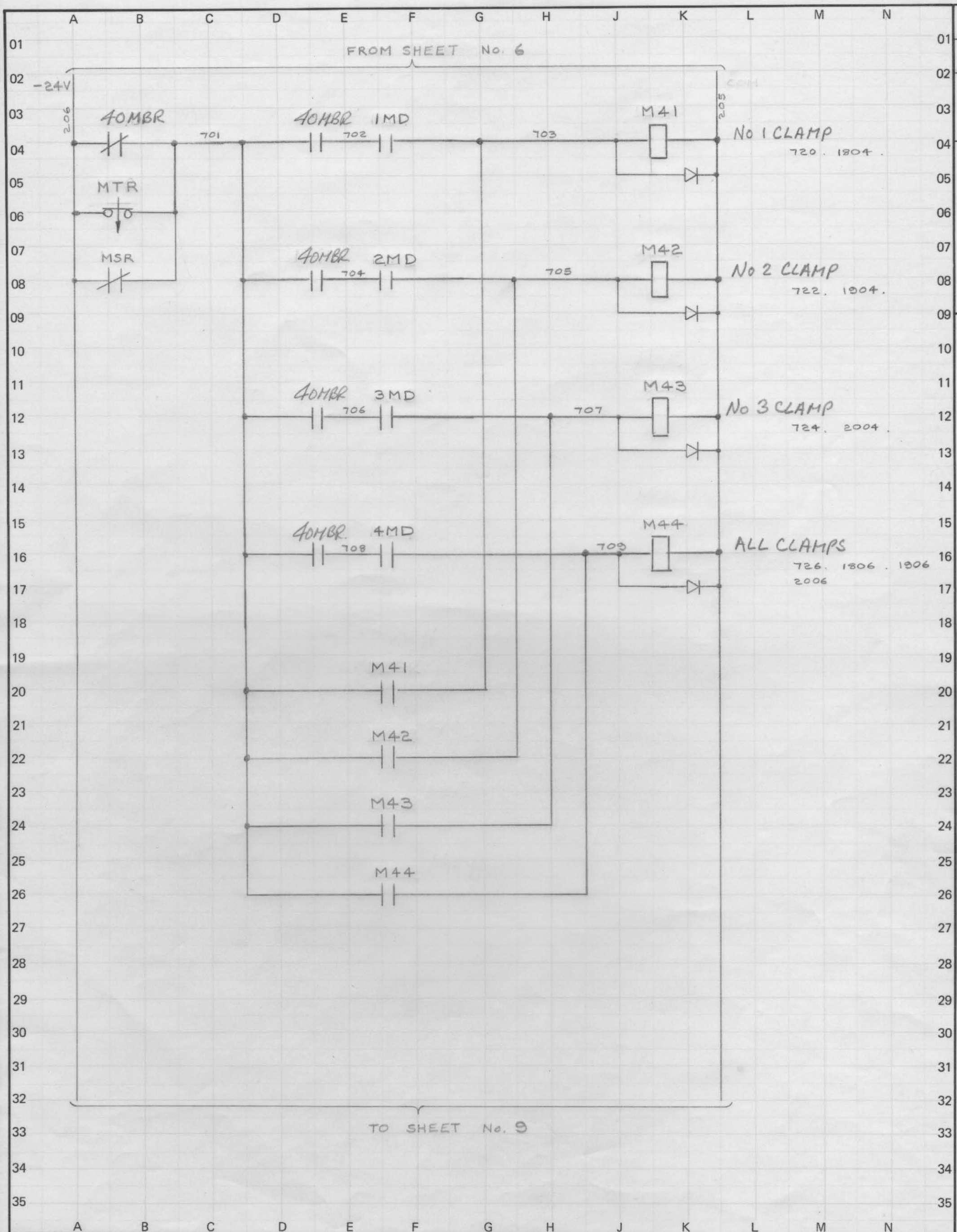


DR | SH 7 | CONTD. 8 | ELEMENTARY DIAGRAM 902M102XD

| TECHN. | ENG. | APPD. | TECHN. | ENG. | APPD. | DATE 27-2-78 |
|---|---|---|---|---|---|---|
| | | | 2 | | | TECHN. RKW |
| | | | | | | ENG. FRS |
| | | | | | | APPD. |

ALLENWEST
Simplex
VARIABLE SPEED DRIVES OPERATION, BRIGHTON, ENGLAND.

CLAMP SELECTION RELAYS
60 TON TURRET PUNCH PRESS
SCOTTISH MACHINE TOOL CORP.

| GO NUMBER | ELEMENTARY DIAGRAM | CONTD. |
|---|---|---|
| 722N08 | 902M102XD | 8 |

IDENT | DR | SH 7

Disclaimer Statement The GE trade mark is the trade mark of General Electric Company of U.S.A. which is not connected with the English Company of a similar name.

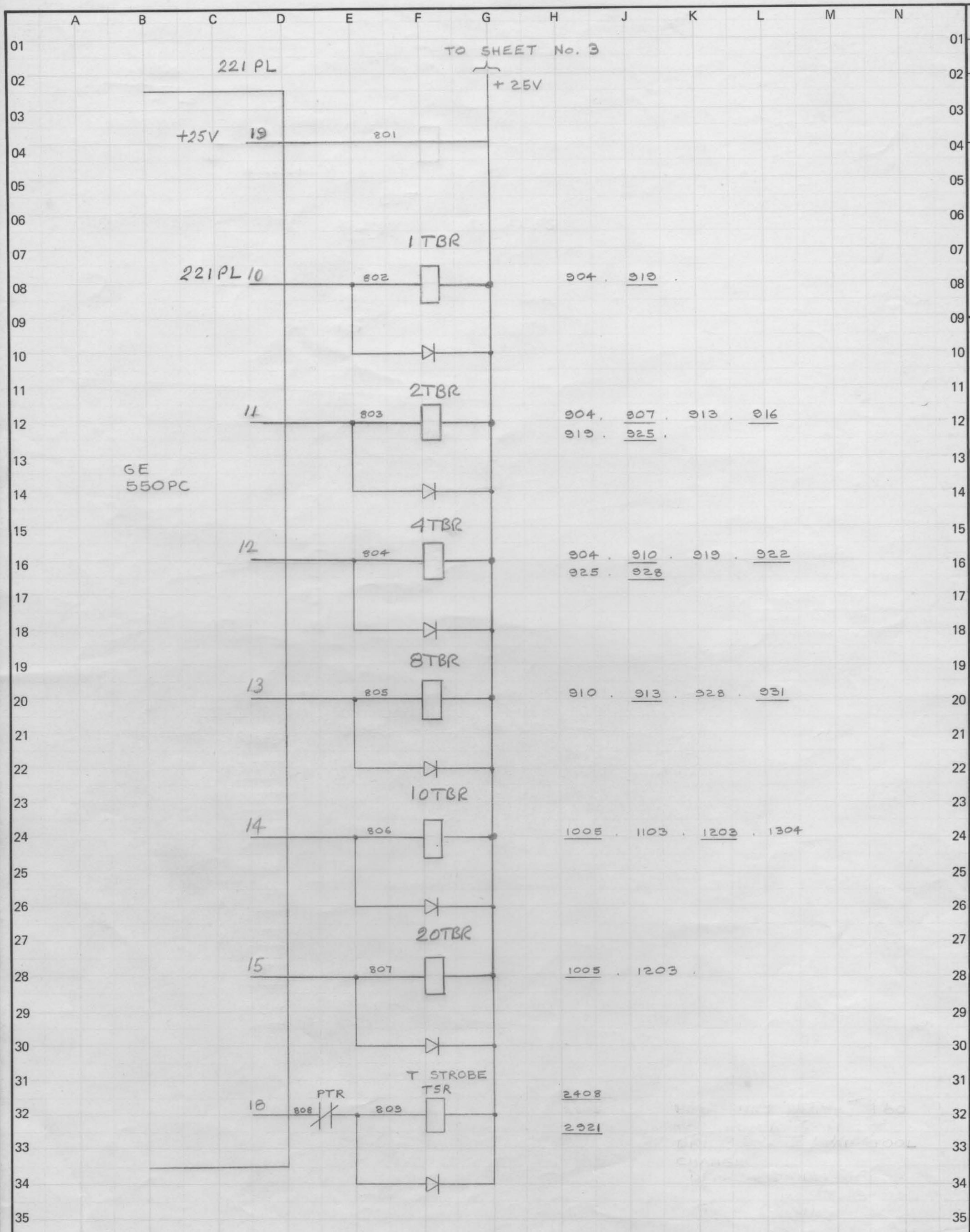


| TECHN. | ENG. | APPD. | TECHN. | ENG. | APPD. | DATE 27-2-78 | ALLENWEST Simplex | TOOL SELECTION BINARY RELAYS. 60 TON TURRET PUNCH PRESS SCOTTISH MACHINE TOOL CORP. | IDENT |
|---|---|---|---|---|---|---|---|---|---|
| | | | 2 | | 2-6-78 | TECHN. RKW | VARIABLE SPEED DRIVES OPERATION, BRIGHTON, ENGLAND. | GO NUMBER 722N08 | ELEMENTARY DIAGRAM 902M102XD |
| | | | | | | ENG. FRS | | CONTD. 9 | DR / SH 8 |
| | | | | | | APPD. | | | |

DR 8 SH CONTD. 9 ELEMENTARY DIAGRAM 902M102XD

Disclaimer Statement The GE trade mark is the trade mark of General Electric Company of U.S.A., which is not connected with the English Company of a similar name

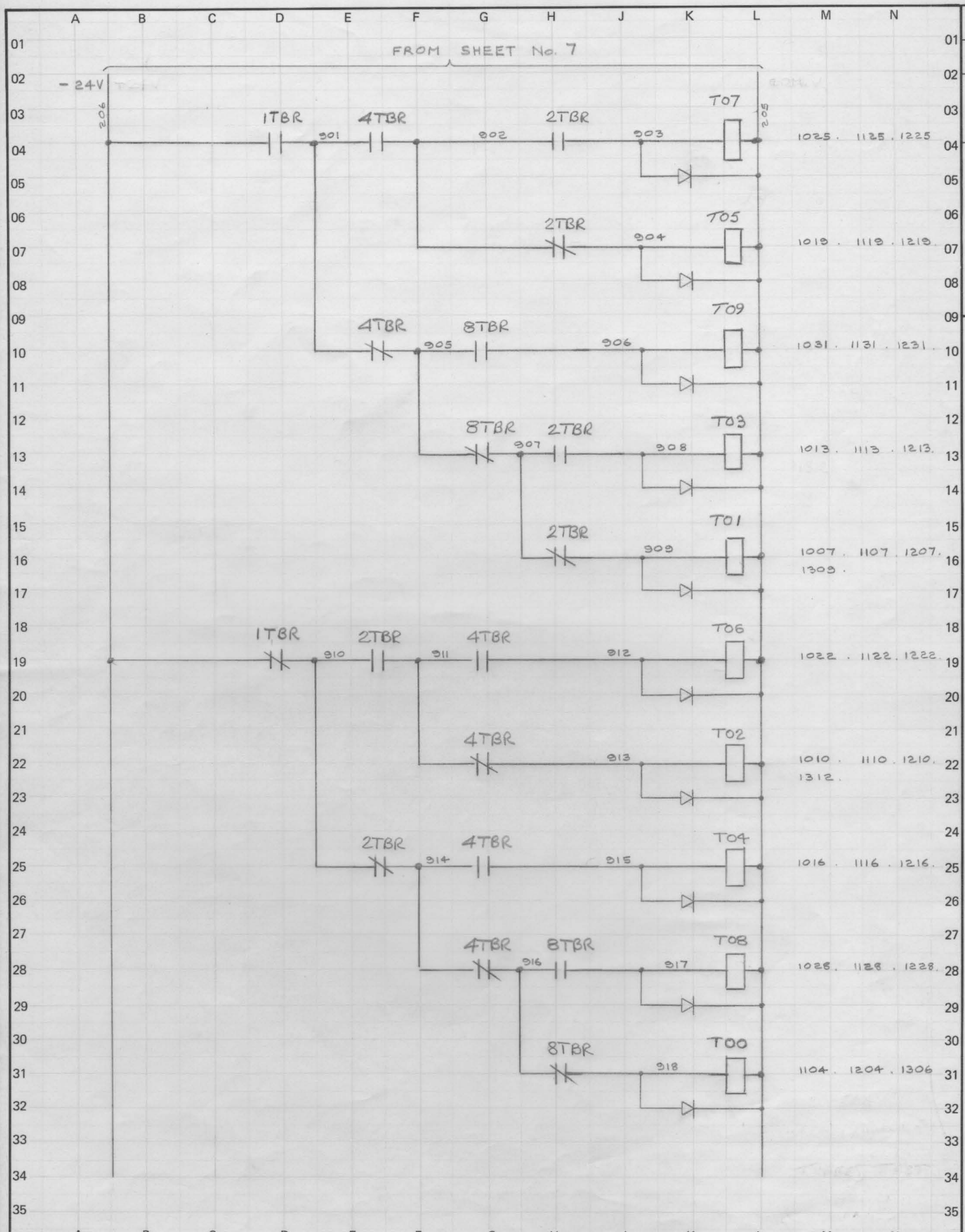


DR | SH 9 | CONTD. 10 | ELEMENTARY DIAGRAM 902M102XD

| TECHN. | ENG. | APPD. | TECHN. | ENG. | APPD. | DATE 27-2-78 |
|---|---|---|---|---|---|---|
| | | | | | | TECHN. RKW |
| | | | | | | ENG. FRS |
| | | | 2 | 12.6.78 | | APPD. |

ALLENWEST Simplex GE
VARIABLE SPEED DRIVES OPERATION, BRIGHTON, ENGLAND.

TOOL SELECTION DECIMAL RELAYS
60 TON TURRET PUNCH PRESS
SCOTTISH MACHINE TOOL CORP.

| GO NUMBER | ELEMENTARY DIAGRAM | CONTD. |
|---|---|---|
| 722N08 | 902M102XD | 10 |

IDENT | DR | SH 9

Disclaimer Statement The ⊛ trade mark is the trade mark of General Electric Company of U.S.A. which is not connected with the English Company of a similar name.

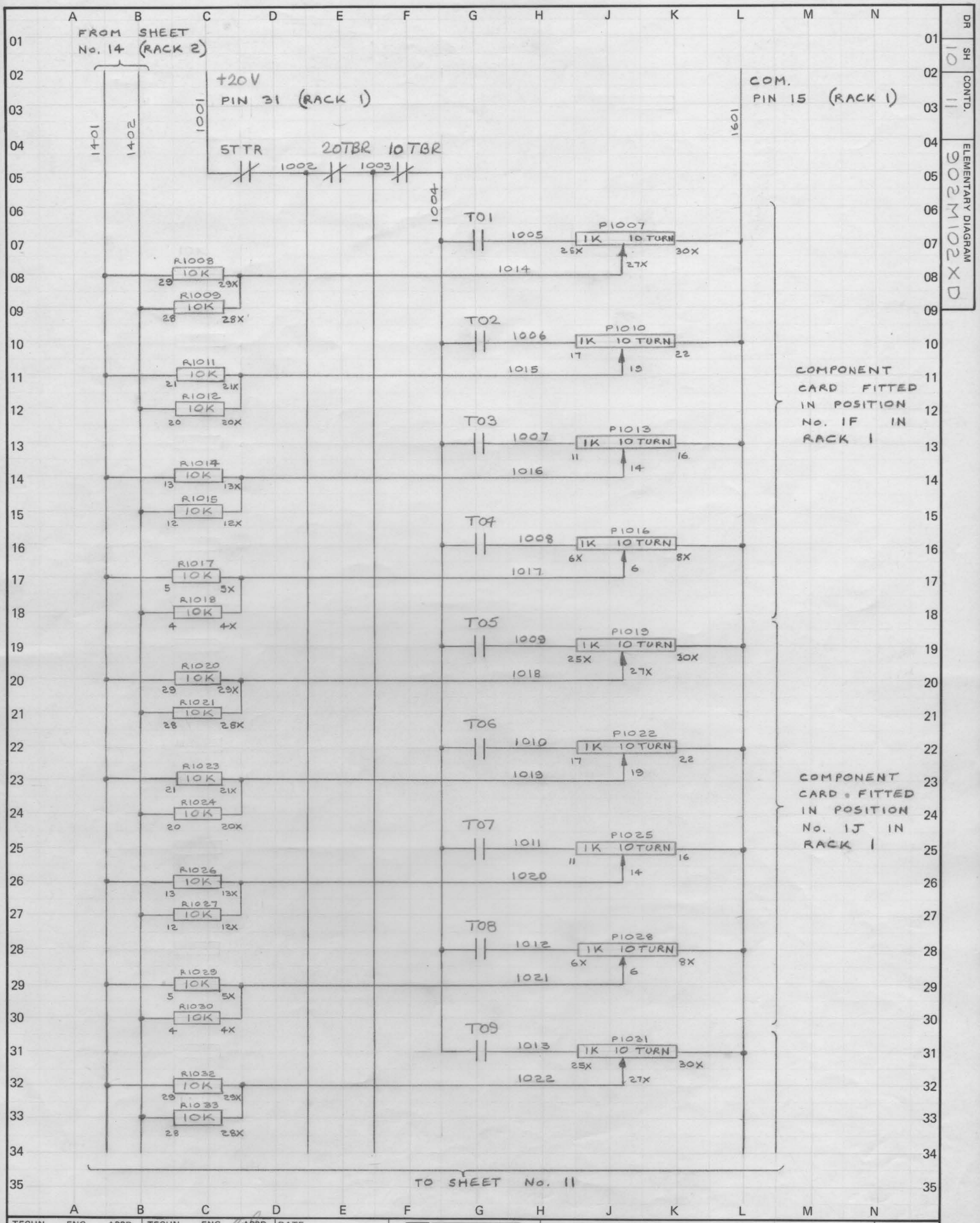


| DR | SH | CONTD. | ELEMENTARY DIAGRAM |
|---|---|---|---|
| | 10 | 11 | 902M102XD |

| TECHN. | ENG. | APPD. | TECHN. | ENG. | APPD. | DATE 27-2-78 |
|---|---|---|---|---|---|---|
| | | | | | | TECHN. RKW |
| | | | | | | ENG. FRS |
| | | | | | | APPD. |

ALLENWEST Simplex GE
VARIABLE SPEED DRIVES OPERATION, BRIGHTON, ENGLAND.

TOOL POSITION SELECTION 1-9
60 TON TURRET PUNCH PRESS
SCOTTISH MACHINE TOOL CORP.

| GO NUMBER | ELEMENTARY DIAGRAM | CONTD. | IDENT | DR | SH |
|---|---|---|---|---|---|
| 722N08 | 902M102XD | 11 | | | 10 |

Disclaimer Statement The GE trade mark is the trade mark of General Electric Company of U.S.A. which is not connected with the English Company of a similar name.

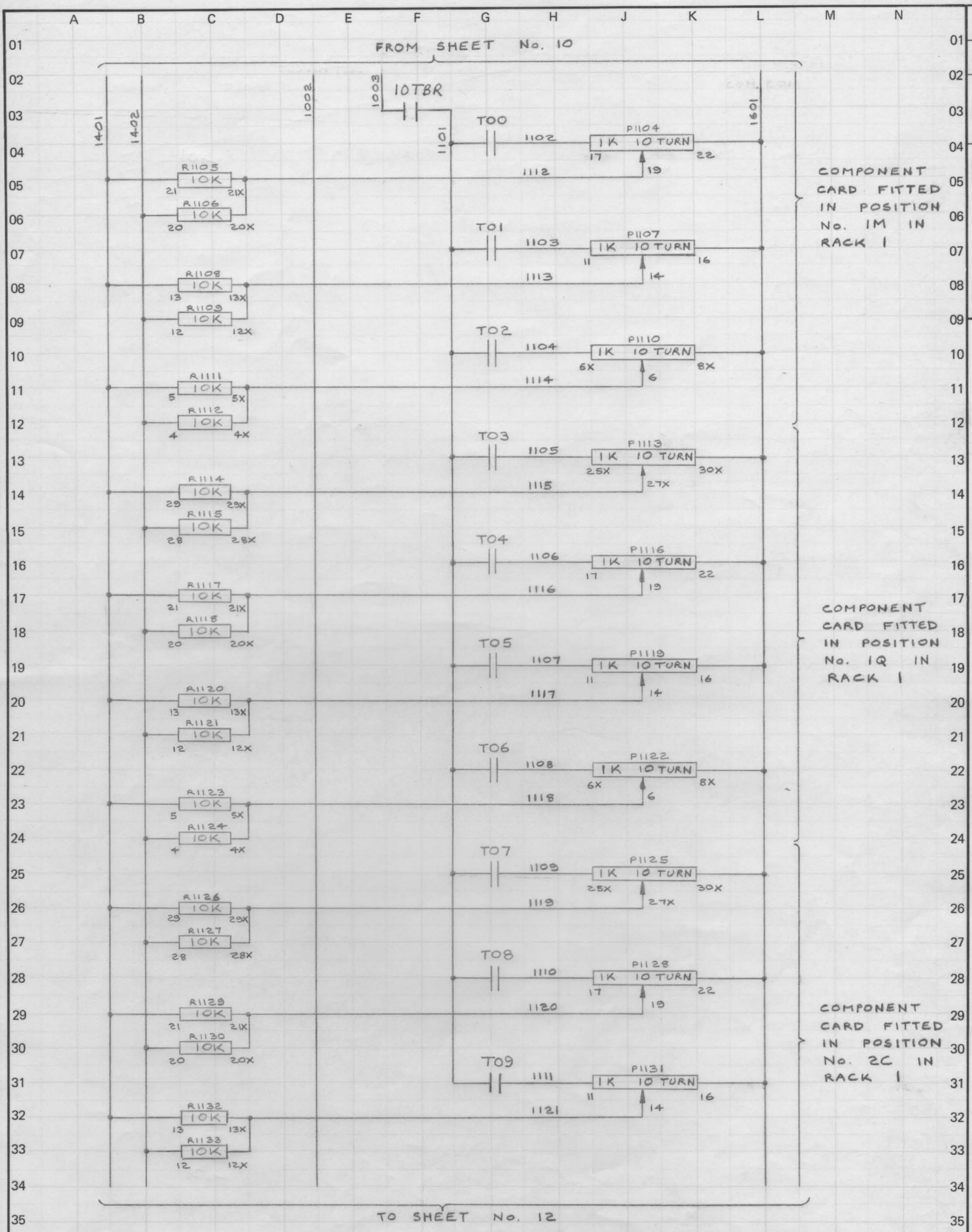


DR | SH 11 | CONTD. 12 | ELEMENTARY DIAGRAM 902M102XD

| TECHN. | ENG. | APPD. | TECHN. | ENG. | APPD. | DATE 27-2-78 | ALLENWEST Simplex | TOOL POSITION SELECTION 10-19 | IDENT |
|---|---|---|---|---|---|---|---|---|---|
| | | | | | | TECHN. RKW | VARIABLE SPEED DRIVES OPERATION, BRIGHTON, ENGLAND. | 60 TON TURRET PUNCH PRESS | DR / SH 11 |
| | | | | | | ENG. FRG | | SCOTTISH MACHINE TOOL CORP. | |
| | | | | | | APPD. | | GO NUMBER 722N08 / ELEMENTARY DIAGRAM 902M102XD / CONTD. 12 | |

Disclaimer Statement The GE trade mark is the trade mark of General Electric Company of U.S.A. which is not connected with the English Company of a similar name.

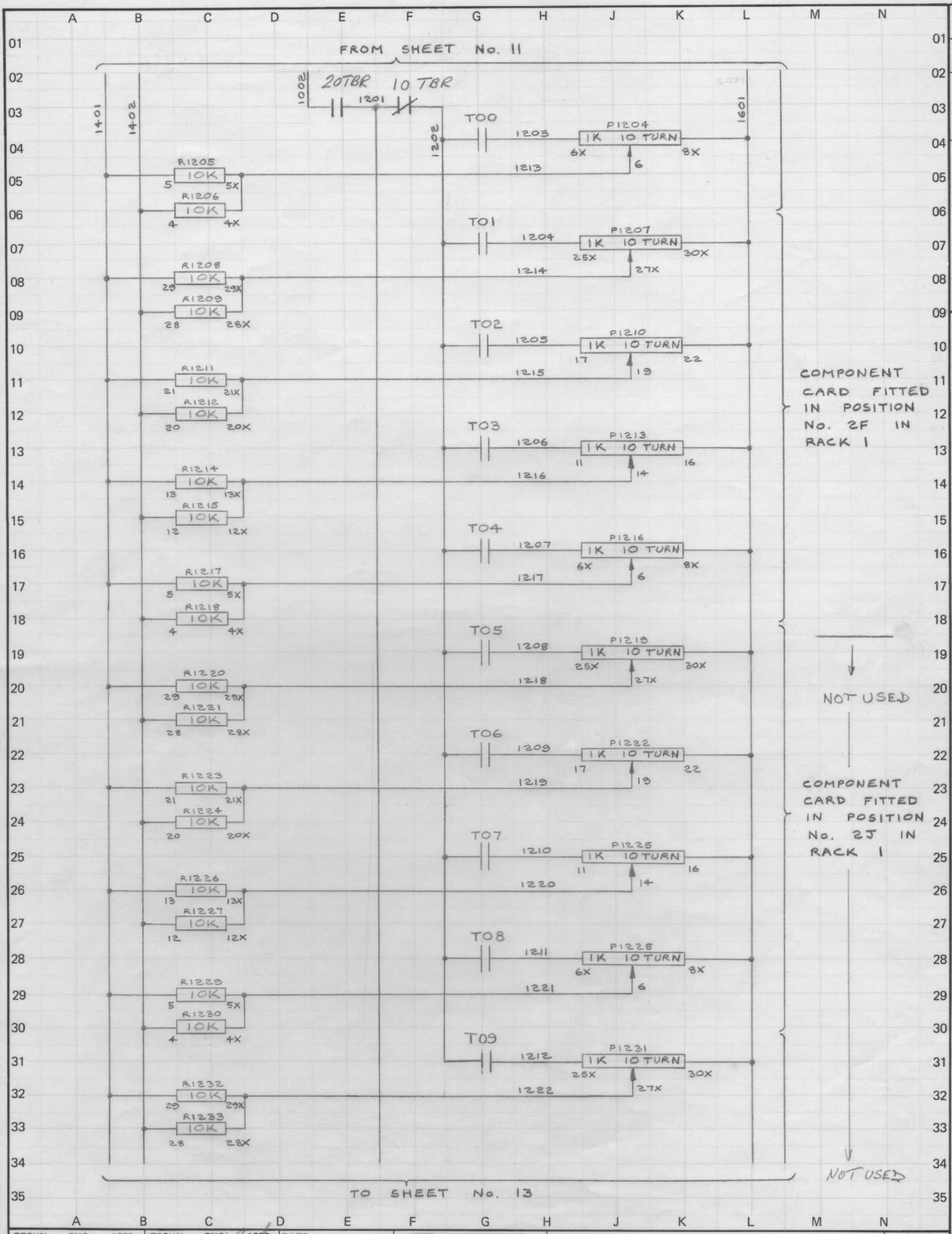


| TECHN. | ENG. | APPD. | TECHN. | ENG. | APPD. | DATE 27-2-78 | ALLENWEST Simplex | TOOL POSITION SELECTION 20-29 | IDENT |
|---|---|---|---|---|---|---|---|---|---|
| | | | 2 | | | TECHN. RKW | VARIABLE SPEED DRIVES OPERATION, BRIGHTON, ENGLAND. | 60 TON TURRET PUNCH PRESS | DR / SH 12 |
| | | | | | | ENG. FRS | | SCOTTISH MACHINE TOOL CORP. | |
| | | | | | | APPD. | | GO NUMBER 722N08 / ELEMENTARY DIAGRAM 902M102XD / CONTD. 13 | |

DR SH 12 CONTD. 13 ELEMENTARY DIAGRAM 902M102XD

Disclaimer Statement The trade mark is the trade mark of General Electric Company of U.S.A., which is not connected with the English Company of a similar name.

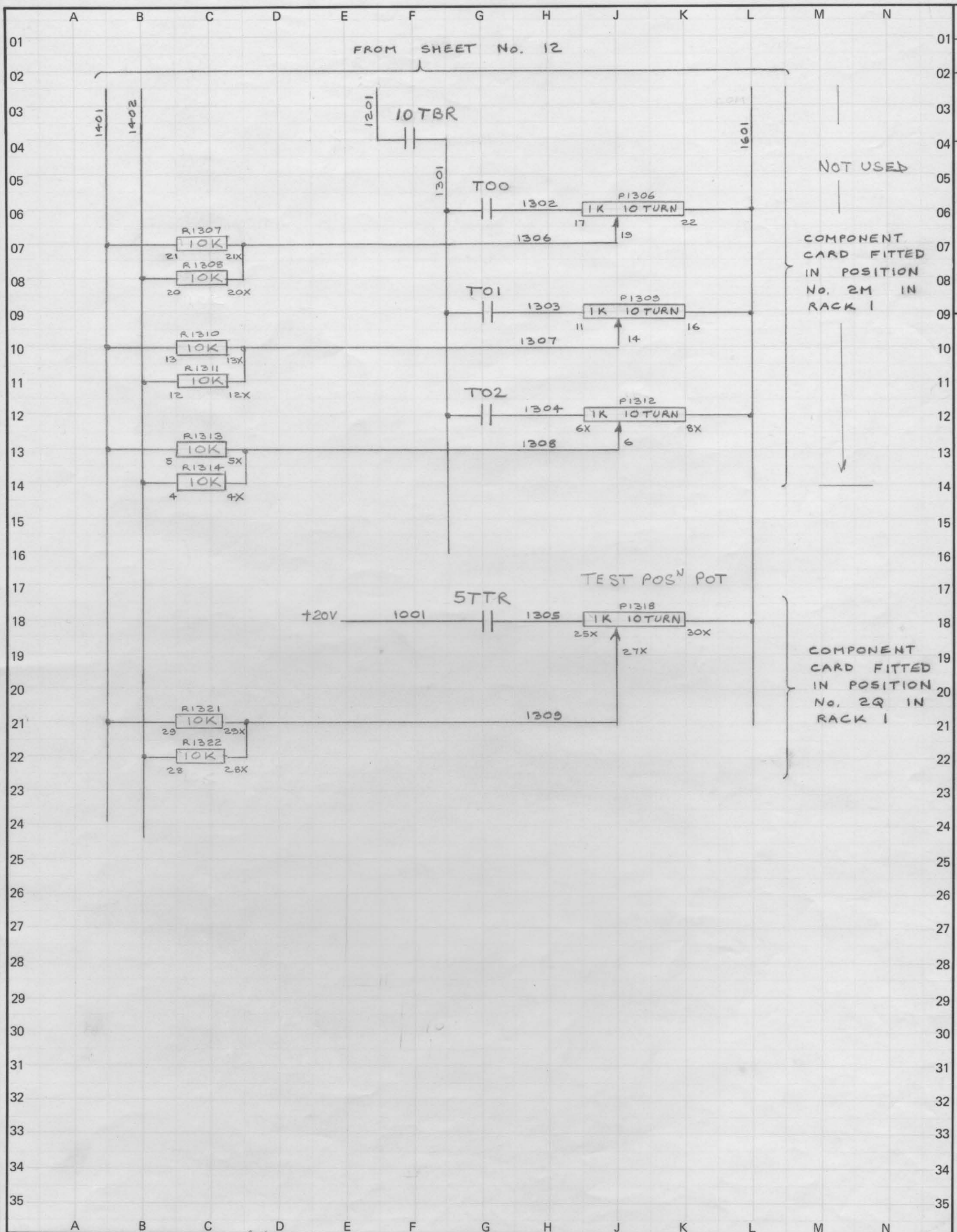


DR | SH 13 | CONTD. 14 | ELEMENTARY DIAGRAM 902M102XD

| TECHN. | ENG. | APPD. | TECHN. | ENG. | APPD. | DATE 27-2-78 |
|---|---|---|---|---|---|---|
| | | | 2 | | | TECHN. RKW |
| | | | | | | ENG. FRS |
| | | | | | | APPD. |

ALLENWEST Simplex
VARIABLE SPEED DRIVES OPERATION, BRIGHTON, ENGLAND.

TOOL POSITION SELECTION 30 – 32 AND TEST POTENTIOMETER
60 TON TURRET PUNCH PRESS
SCOTTISH MACHINE TOOL CORP.

| GO NUMBER | ELEMENTARY DIAGRAM | CONTD. |
|---|---|---|
| 722N08 | 902M102XD | 14 |

IDENT | DR | SH 13

Disclaimer Statement The GE trade mark is the trade mark of General Electric Company of U.S.A. which is not connected with the English Company of a similar name.

| DR | SH | CONTD. | ELEMENTARY DIAGRAM |
|---|---|---|---|
| | 14 | 15 | 902M102XD |

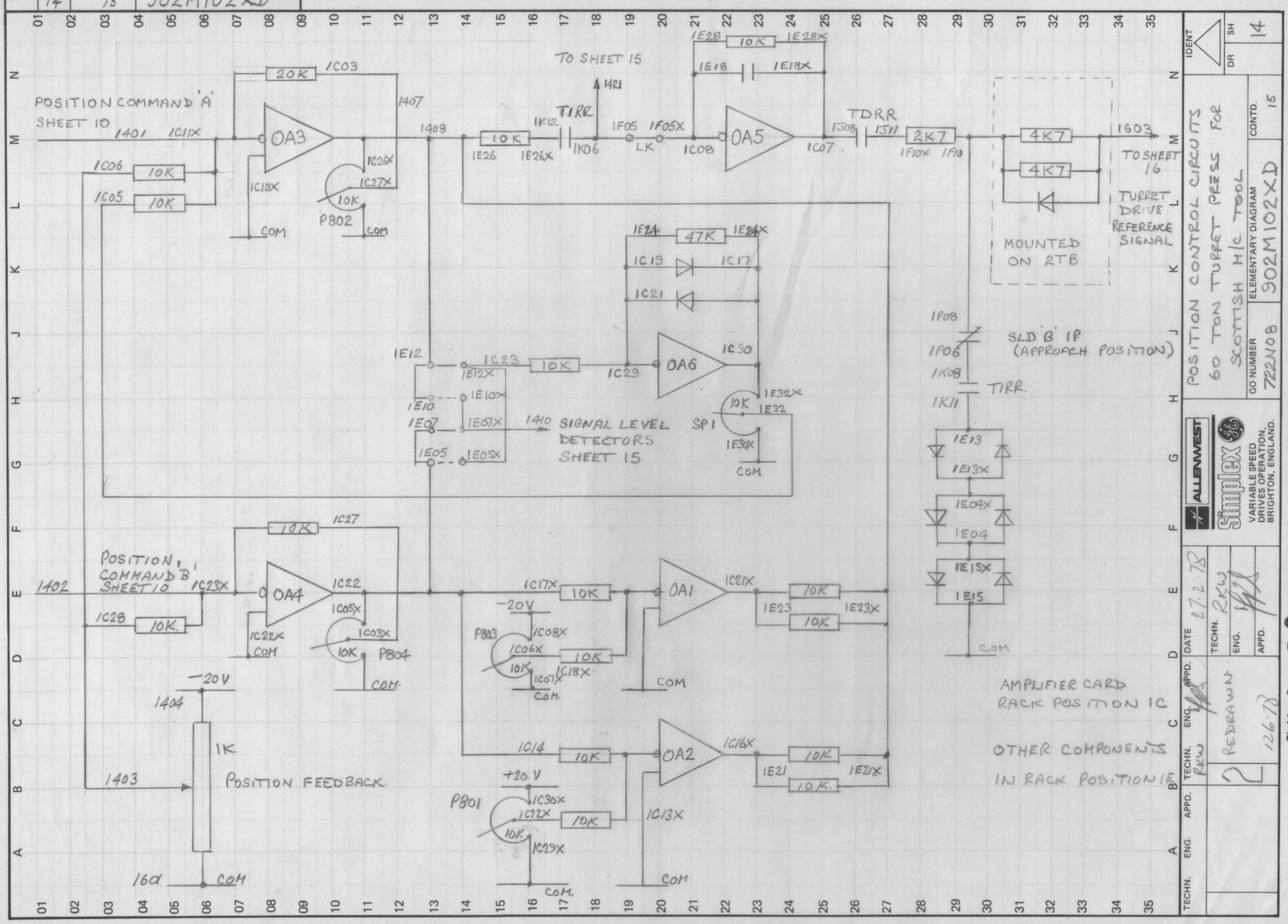


POSITION CONTROL CIRCUITS
60 TON TURRET PRESS FOR
SCOTTISH M/C TOOL

| GO NUMBER | ELEMENTARY DIAGRAM | CONTD. |
|---|---|---|
| 722N08 | 902M102XD | 15 |

IDENT — DR — SH 14

ALLENWEST

Simplex

VARIABLE SPEED DRIVES OPERATION, BRIGHTON, ENGLAND.

| | | | |
|---|---|---|---|
| TECHN. | RKW | DATE | 17.2.78 |
| ENG. | | | |
| APPD. | | | |
| TECHN. | RKW | APPD. | |
| ENG. | | | |
| TECHN. | | APPD. | |

2 REDRAWN 12.6.78

Disclaimer Statement The trade mark is the trade mark of General Electric Company of U.S.A., which is not connected with the English Company of a similar name.

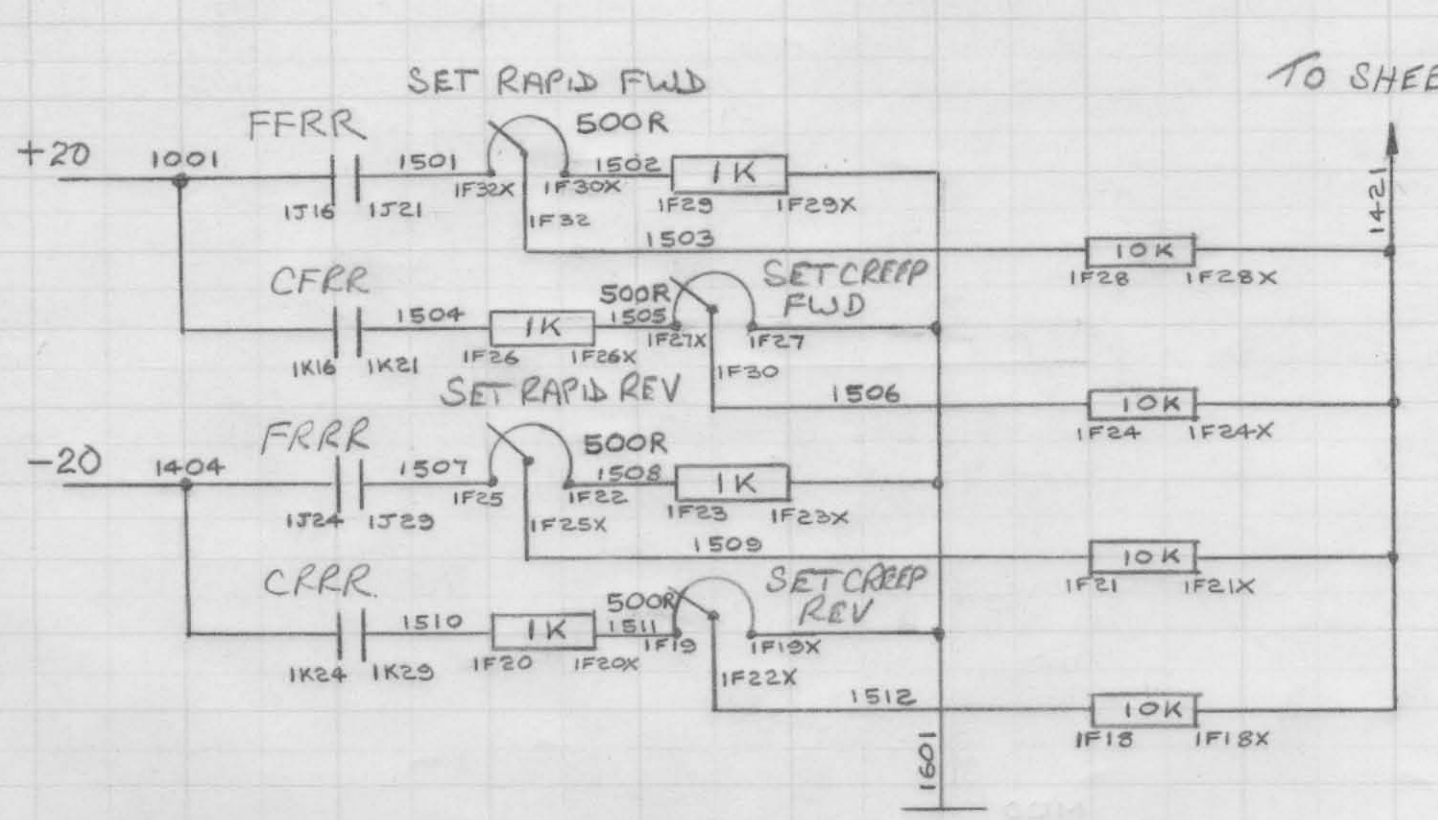


FUNCTIONAL BLOCK DIAGRAM

SIGNAL LEVEL DETECTOR.

G01 SLA

G02 SLA & SLB

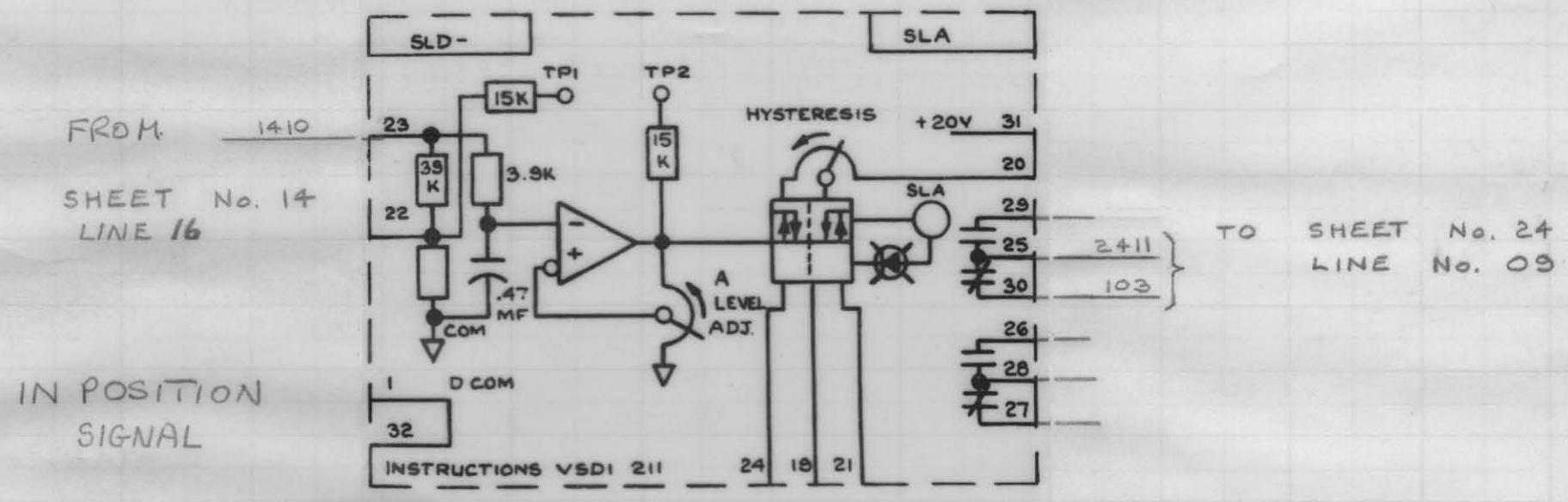


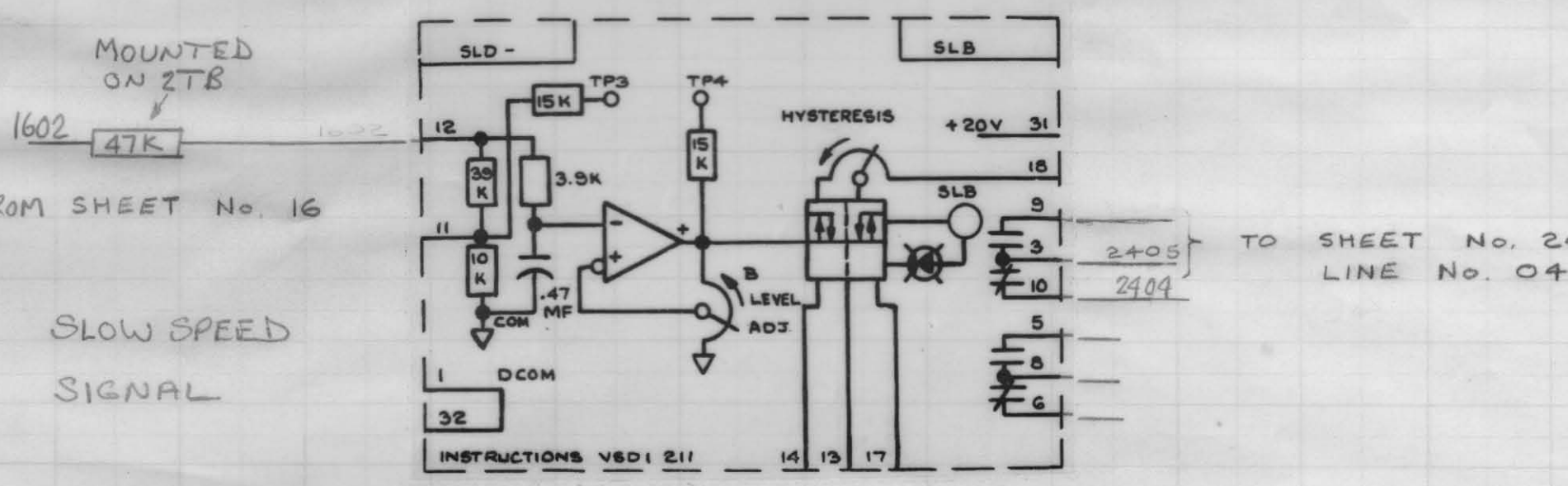


FITTED IN POSITION 'IN' IN RACK 2

| TECHN. | ENG. | APPD. | TECHN. | ENG. | APPD. | DATE 27-2-78 | ALLENWEST Simplex | POSITION CONTROL CIRCUITS 60 TON TURRET PUNCH PRESS SCOTTISH MACHINE TOOL CORP. | IDENT |
|---|---|---|---|---|---|---|---|---|---|
| | | | 2 | | | TECHN. RKW | VARIABLE SPEED DRIVES OPERATION, BRIGHTON, ENGLAND. | | |
| | | | | | | ENG. FRS | | | |
| | | | | | | APPD. | | | |

| GO NUMBER | ELEMENTARY DIAGRAM | CONTD. | DR | SH |
|---|---|---|---|---|
| 722N08 | 902M102XD | 16 | | 15 |

Disclaimer Statement The GE trade mark is the trade mark of General Electric Company of U.S.A., which is not connected with the English Company of a similar name.

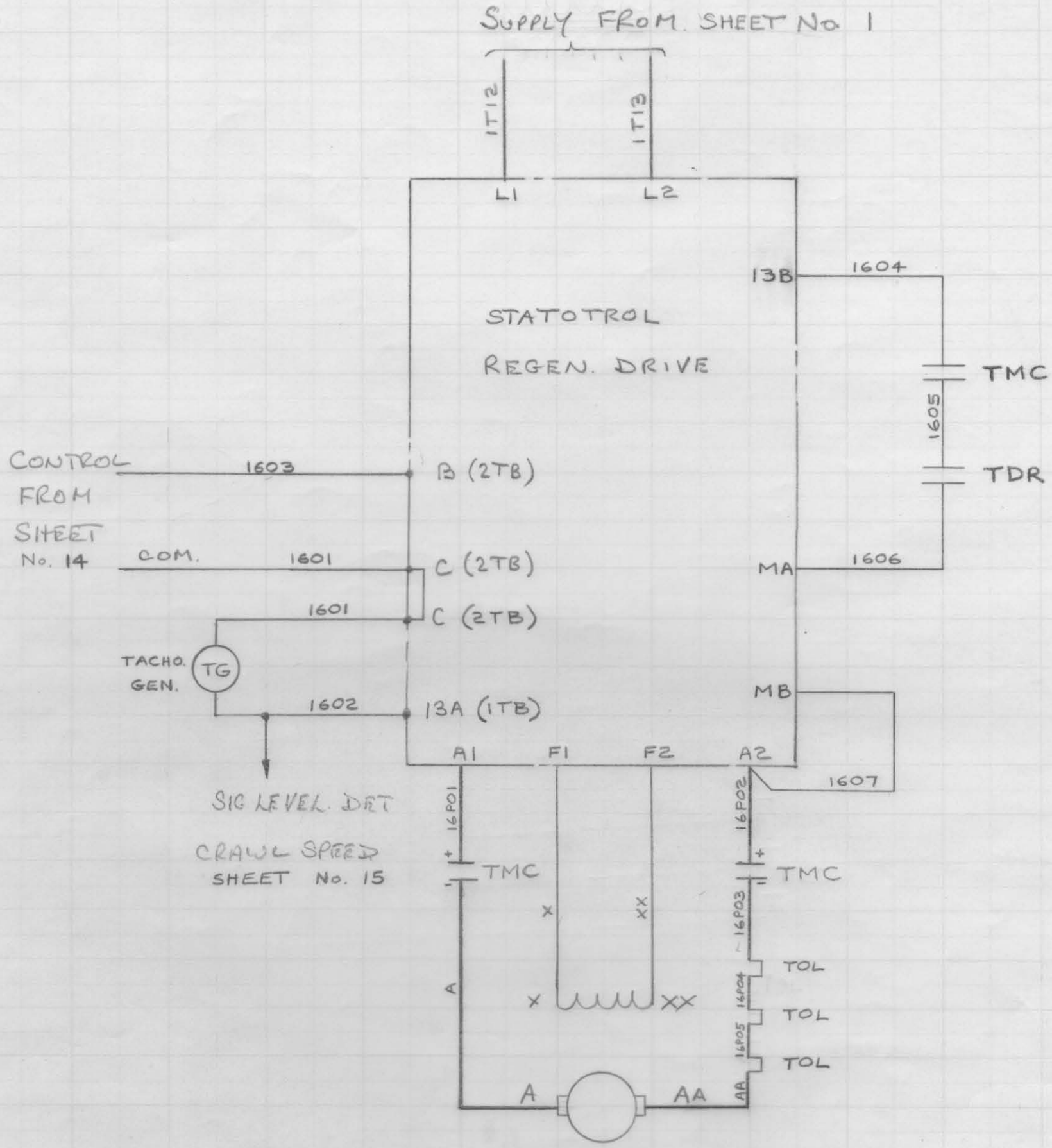


DR | SH 16 | CONTD. 17 | ELEMENTARY DIAGRAM 902M102XD

| TECHN. | ENG. | APPD. | TECHN. | ENG. | APPD. | DATE 27-2-78 | ALLENWEST Simplex | TURRET DRIVE 60 TON TURRET PUNCH PRESS SCOTTISH MACHINE TOOL CORP. | IDENT |
|---|---|---|---|---|---|---|---|---|---|
| | | | 2 | | | TECHN. RKW | VARIABLE SPEED DRIVES OPERATION, BRIGHTON, ENGLAND. | | |
| | | | | | | ENG. FRS | | | |
| | | | | | | APPD. | | | |

| GO NUMBER | ELEMENTARY DIAGRAM | CONTD. | DR | SH |
|---|---|---|---|---|
| 722N08 | 902M102XD | 17 | | 16 |

Disclaimer Statement The GE trade mark is the trade mark of General Electric Company of U.S.A. which is not connected with the English Company of similar

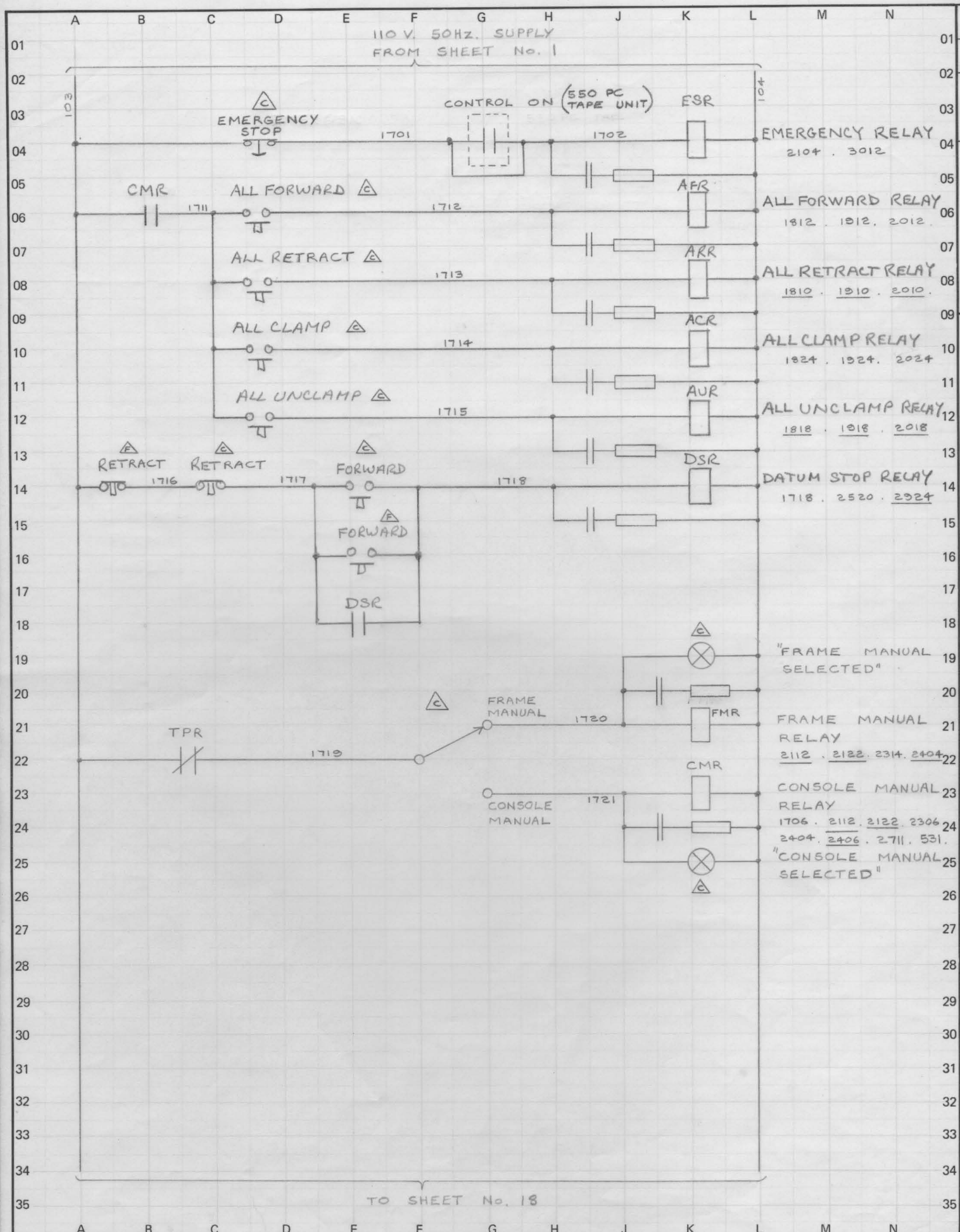


DR | SH 17 | CONTD. 18 | ELEMENTARY DIAGRAM 902M102XD

| TECHN. | ENG. | APPD. | TECHN. | ENG. | APPD. | DATE 27-2-78 |
|---|---|---|---|---|---|---|
| | | | 2 | | | TECHN. RKW |
| | | | | | | ENG. FRS |
| | | | | | | APPD. |

ALLENWEST Simplex GE
VARIABLE SPEED DRIVES OPERATION, BRIGHTON, ENGLAND.

CLAMP CONTROL CIRCUIT
60 TON TURRET PUNCH PRESS
SCOTTISH MACHINE TOOL CORP.

| GO NUMBER | ELEMENTARY DIAGRAM | CONTD. |
|---|---|---|
| 722N08 | 902M102XD | 18 |

IDENT | DR | SH 17

Disclaimer Statement The GE trade mark is the trade mark of General Electric Company of U.S.A., which is not connected with the English Company of a similar name.

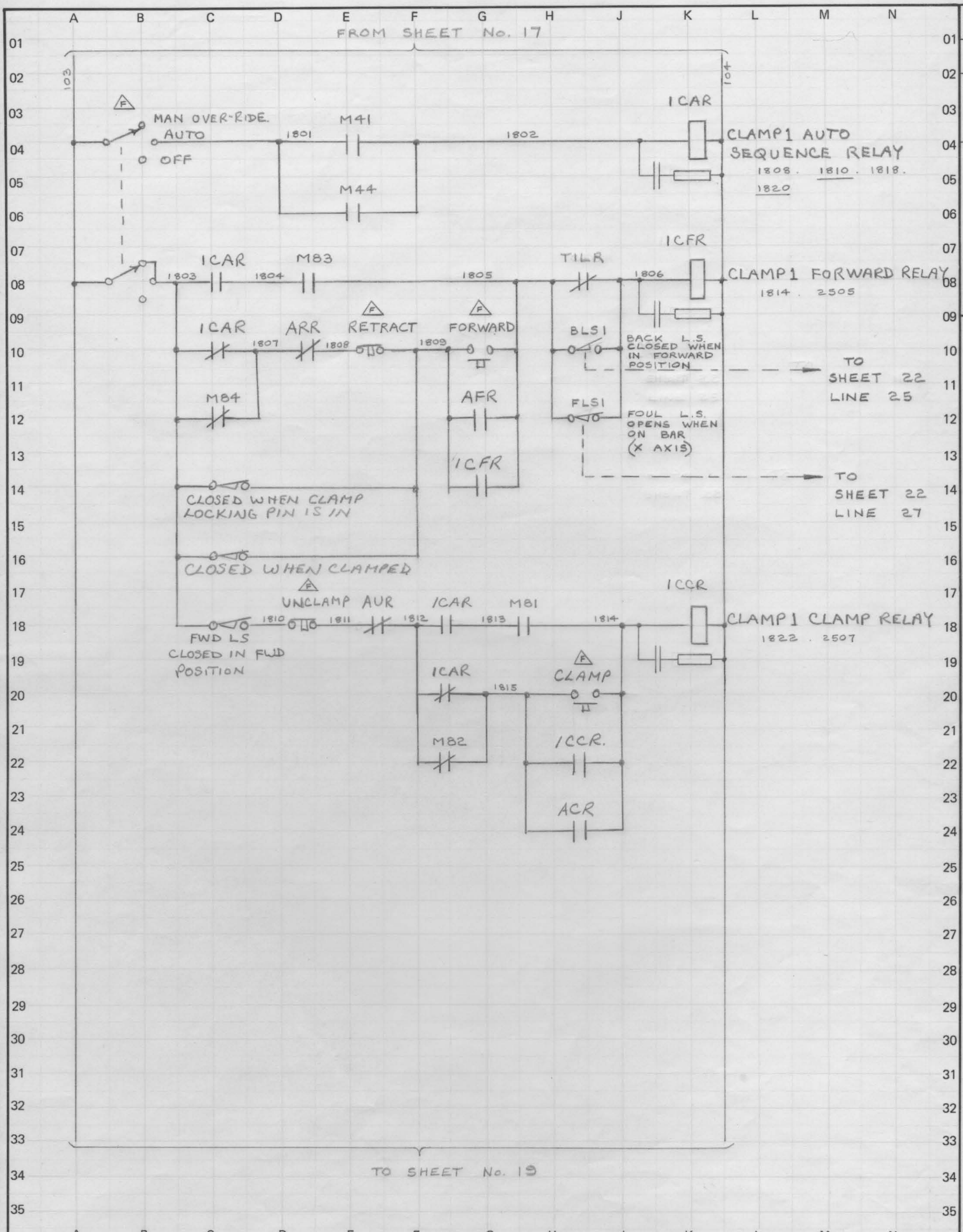


| TECHN. | ENG. | APPD. | TECHN. | ENG. | APPD. | DATE 27-2-78 | ALLENWEST Simplex | No1 CLAMP CIRCUITS 60 TON TURRET PUNCH PRESS SCOTTISH MACHINE TOOL CORP. | IDENT |
|---|---|---|---|---|---|---|---|---|---|
| | | | 2 | | | TECHN. RKW | VARIABLE SPEED DRIVES OPERATION, BRIGHTON, ENGLAND. | | |
| | | | | | | ENG. FRS | | | |
| | | | | | | APPD. | | | |

| GO NUMBER | ELEMENTARY DIAGRAM | CONTD. | DR | SH |
|---|---|---|---|---|
| 722N08 | 902M102XD | 19 | | 18 |

DR | SH 18 | CONTD. 19 | ELEMENTARY DIAGRAM 902M102XD

Disclaimer Statement The trade mark is the trade mark of General Electric Company of U.S.A., which is not connected with the English Company of a similar name.

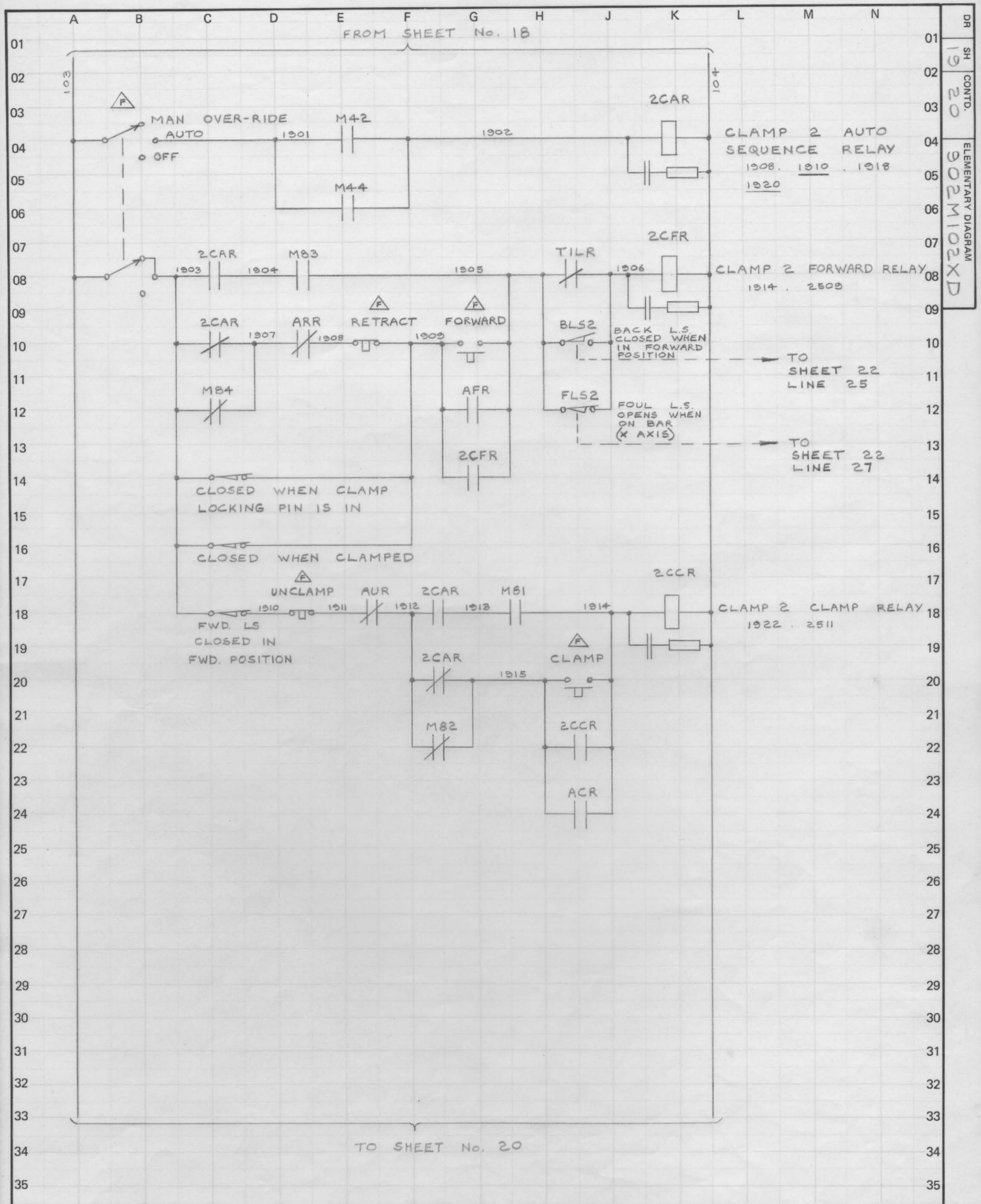


| TECHN. | ENG. | APPD. | TECHN. | ENG. | APPD. | DATE 27-2-78 |
|---|---|---|---|---|---|---|
| | | | 2 | | | TECHN. RKW |
| | | | | | | ENG. FRS |
| | | | | | | APPD. |

ALLENWEST
Simplex
VARIABLE SPEED DRIVES OPERATION, BRIGHTON, ENGLAND.

NO 2 CLAMP CIRCUITS
60 TON TURRET PUNCH PRESS
SCOTTISH MACHINE TOOL CORP.

| GO NUMBER | ELEMENTARY DIAGRAM | CONTD. |
|---|---|---|
| 722N08 | 902M102XD | 20 |

IDENT

| DR | SH |
|---|---|
| | 19 |

DR | SH 19 | CONTD. 20 | ELEMENTARY DIAGRAM 902M102XD

Disclaimer Statement The GE trade mark is the trade mark of General Electric Company of U.S.A. which is not connected with the English Company of similar name

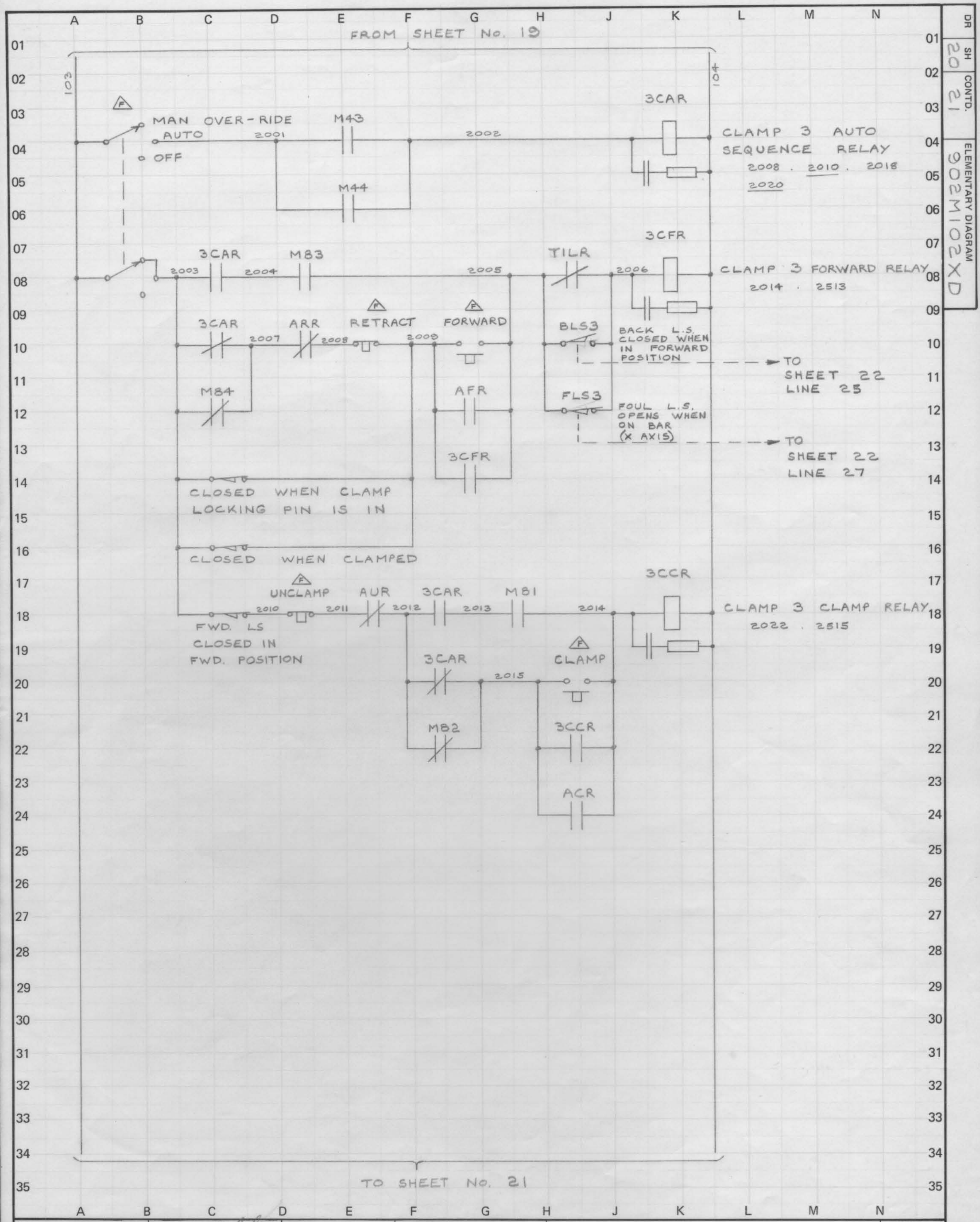


| TECHN. | ENG. | APPD. | TECHN. | ENG. | APPD. | DATE 27-2-78 | ALLENWEST Simplex | NO 3 CLAMP CIRCUITS | IDENT |
|---|---|---|---|---|---|---|---|---|---|
| | | | 2 | | | TECHN. RKW | VARIABLE SPEED DRIVES OPERATION, BRIGHTON, ENGLAND. | 60 TON TURRET PUNCH PRESS | DR / SH 20 |
| | | | | | | ENG. FRS | | SCOTTISH MACHINE TOOL CORP. | |
| | | | | | | APPD. | | GO NUMBER 722N08 / ELEMENTARY DIAGRAM 902M102XD / CONTD. 21 | |

Disclaimer Statement The ⊛ trade mark is the trade mark of General Electric Company of U.S.A. which is not connected with the English Company of a similar name.

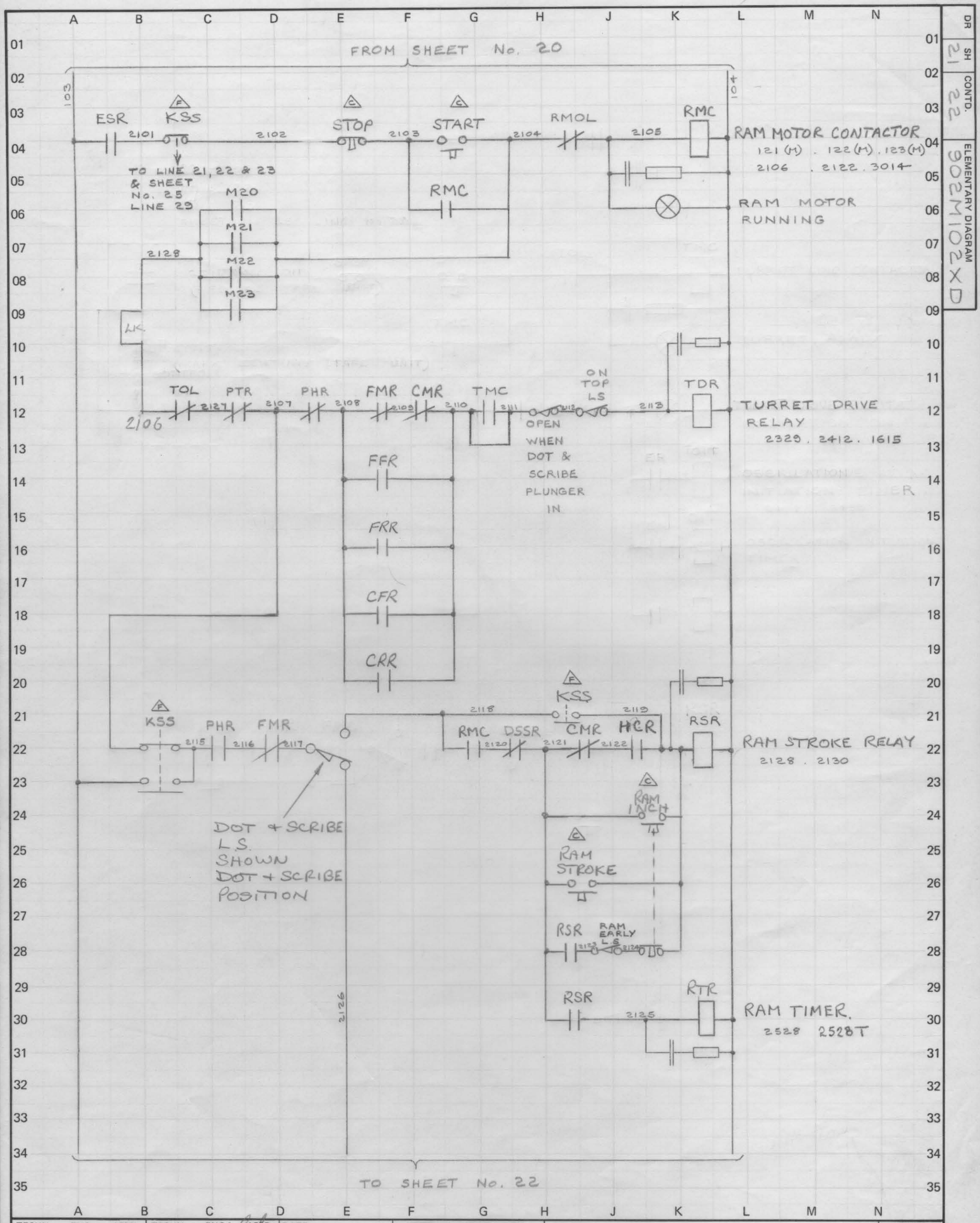


DR SH 21 CONTD. 22 ELEMENTARY DIAGRAM 902M102XD

| TECHN. | ENG. | APPD. | TECHN. | ENG. | APPD. | DATE 27-2-78 |
|---|---|---|---|---|---|---|
| | | | 2 | | | TECHN. RKW |
| | | | | | | ENG. FRS |
| | | | | | | APPD. |

ALLENWEST Simplex VARIABLE SPEED DRIVES OPERATION, BRIGHTON, ENGLAND.

RAM CONTROL
60 TON TURRET PUNCH PRESS
SCOTTISH MACHINE TOOL CORP.

| GO NUMBER | ELEMENTARY DIAGRAM | CONTD. |
|---|---|---|
| 722N08 | 902M102XD | 22 |

IDENT DR SH 21

Disclaimer Statement The trade mark is the trade mark of General Electric Company of U.S.A., which is not connected with the English Company of a similar name.

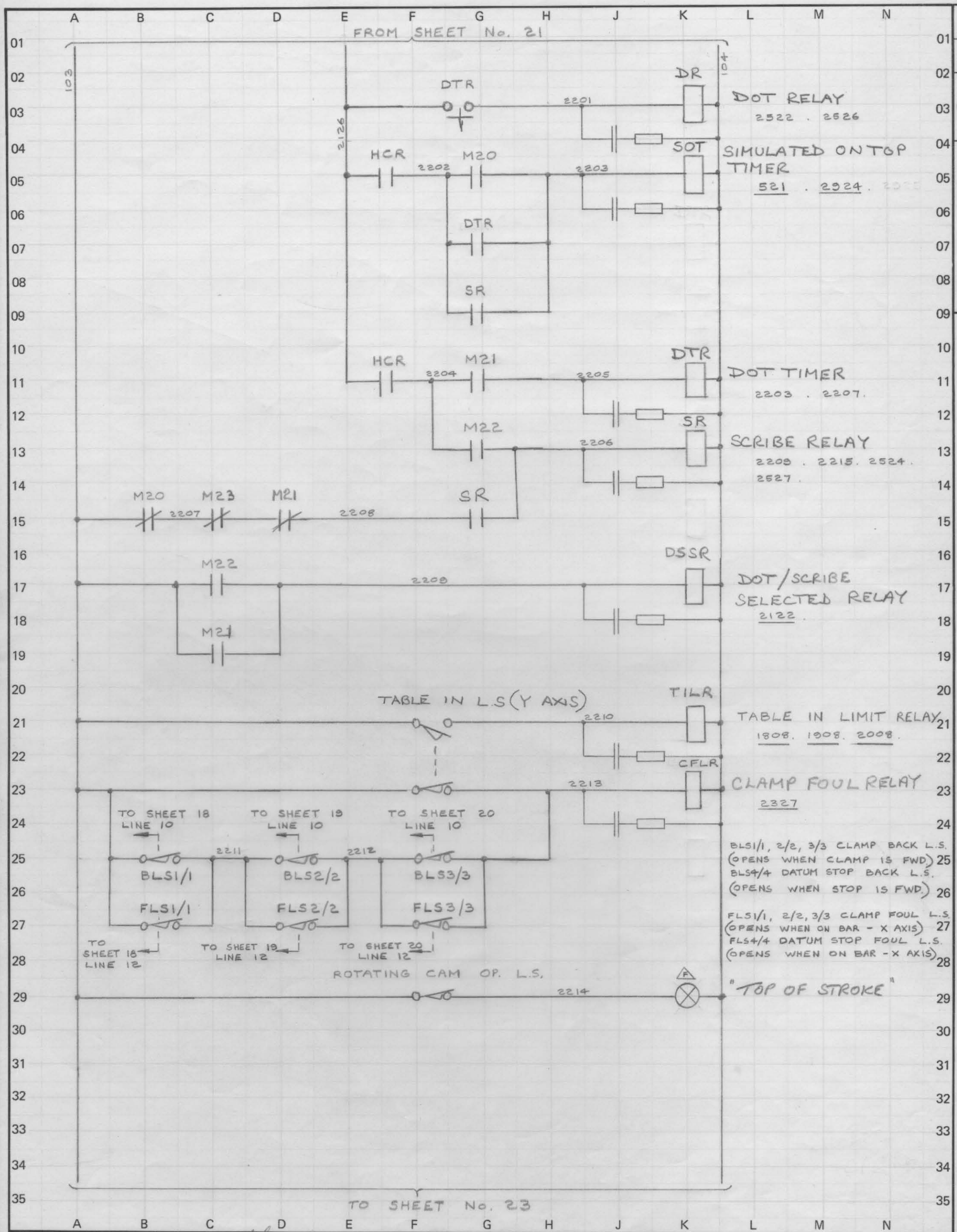


DR SH 22 CONTD. 23 ELEMENTARY DIAGRAM 902M102XD

| TECHN. | ENG. | APPD. | TECHN. | ENG. | APPD. | DATE 27-2-78 | ALLENWEST Simplex | DOT AND SCRIBE CIRCUITS 60 TON TURRET PUNCH PRESS SCOTTISH MACHINE TOOL CORP. | IDENT |
|---|---|---|---|---|---|---|---|---|---|
| | | | | | | TECHN. RKW | VARIABLE SPEED DRIVES OPERATION, BRIGHTON, ENGLAND. | | DR SH 22 |
| | | | | | | ENG. FRG | | | |
| | | | | | | APPD. | | | |

| GO NUMBER | ELEMENTARY DIAGRAM | CONTD. |
|---|---|---|
| 722N08 | 902M102XD | 23 |

Disclaimer Statement The GE trade mark is the trade mark of General Electric Company of U.S.A., which is not connected with the English Company of a similar name.

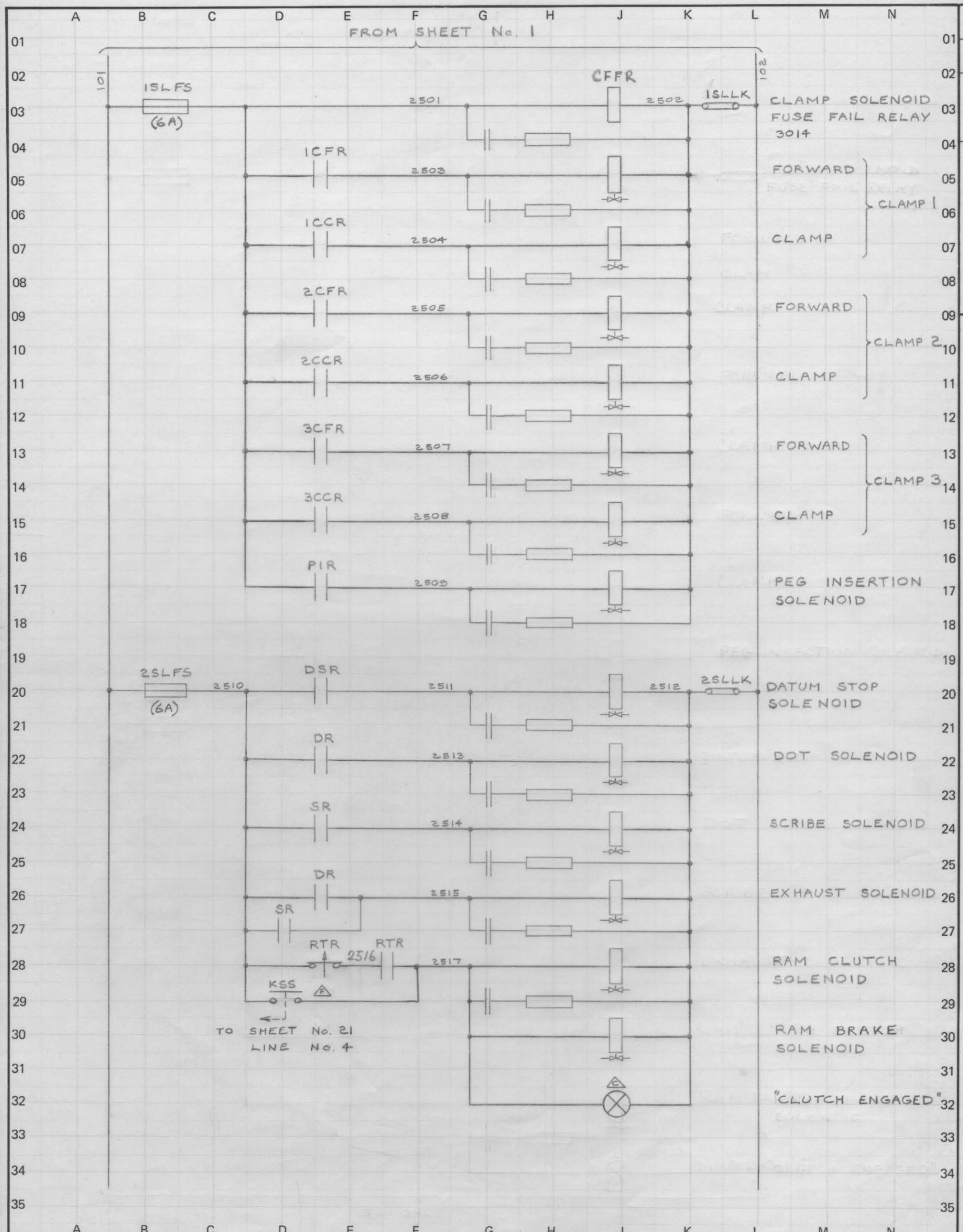


DR | SH 25 | CONTD. 26 | ELEMENTARY DIAGRAM 902M102XD

| TECHN. | ENG. | APPD. | TECHN. | ENG. | APPD. | DATE 27-2-78 |
|---|---|---|---|---|---|---|
| | | | 2 | | | TECHN. RKW |
| | | | | | | ENG. FRS |
| | | | | | | APPD. |

ALLENWEST Simplex GE
VARIABLE SPEED DRIVES OPERATION, BRIGHTON, ENGLAND.

CLAMP, PEG, DATUM, DOT, SCRIBE, EXHAUST, RAM - SOLENOIDS & CLUTCHES. 60 TON TURRET PUNCH PRESS SCOTTISH MACHINE TOOL CORP.

| GO NUMBER | ELEMENTARY DIAGRAM | CONTD. |
|---|---|---|
| 722N08 | 902M102XD | 26 |

IDENT | DR | SH 25

Disclaimer Statement The GE trade mark is the trade mark of General Electric Company of U.S.A. which is not connected with the English Company of similar

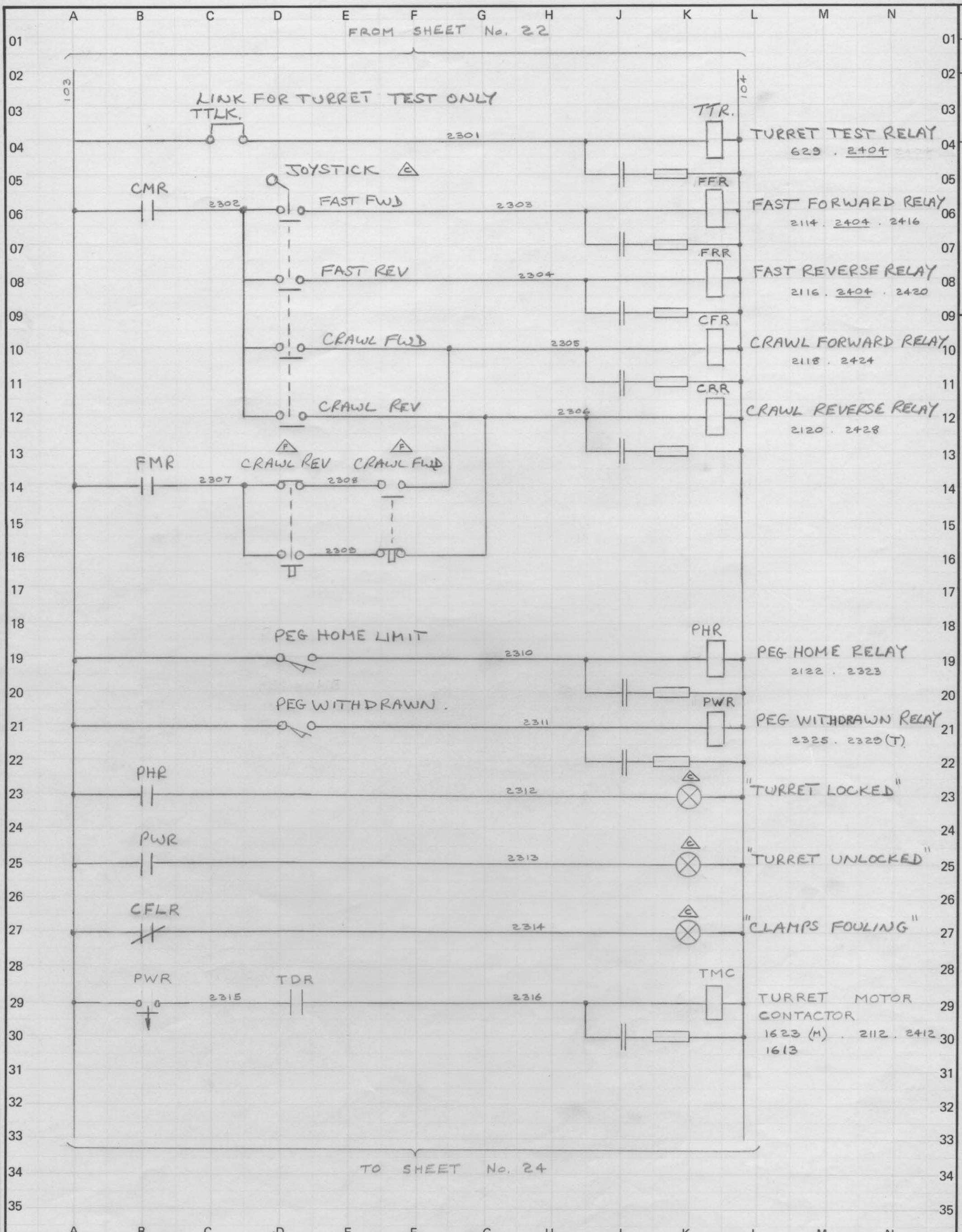


DR
SH 23
CONTD. 24
ELEMENTARY DIAGRAM 902M102XD

| TECHN. | ENG. | APPD. | TECHN. | ENG. | APPD. | DATE 27-2-78 | ALLENWEST Simplex | TURRET CONTROLS | IDENT |
|---|---|---|---|---|---|---|---|---|---|
| | | | 2 | | | TECHN. RKW | VARIABLE SPEED DRIVES OPERATION, BRIGHTON, ENGLAND. | 60 TON TURRET PUNCH PRESS | DR / SH |
| | | | | | | ENG. FRS | | SCOTTISH MACHINE TOOL CORP. | 23 |
| | | | | | | APPD. | | GO NUMBER 722N08 / ELEMENTARY DIAGRAM 902M102XD / CONTD. 24 | |

Disclaimer Statement The trade mark is the trade mark of General Electric Company of U.S.A. which is not connected with the English Company of a similar name.

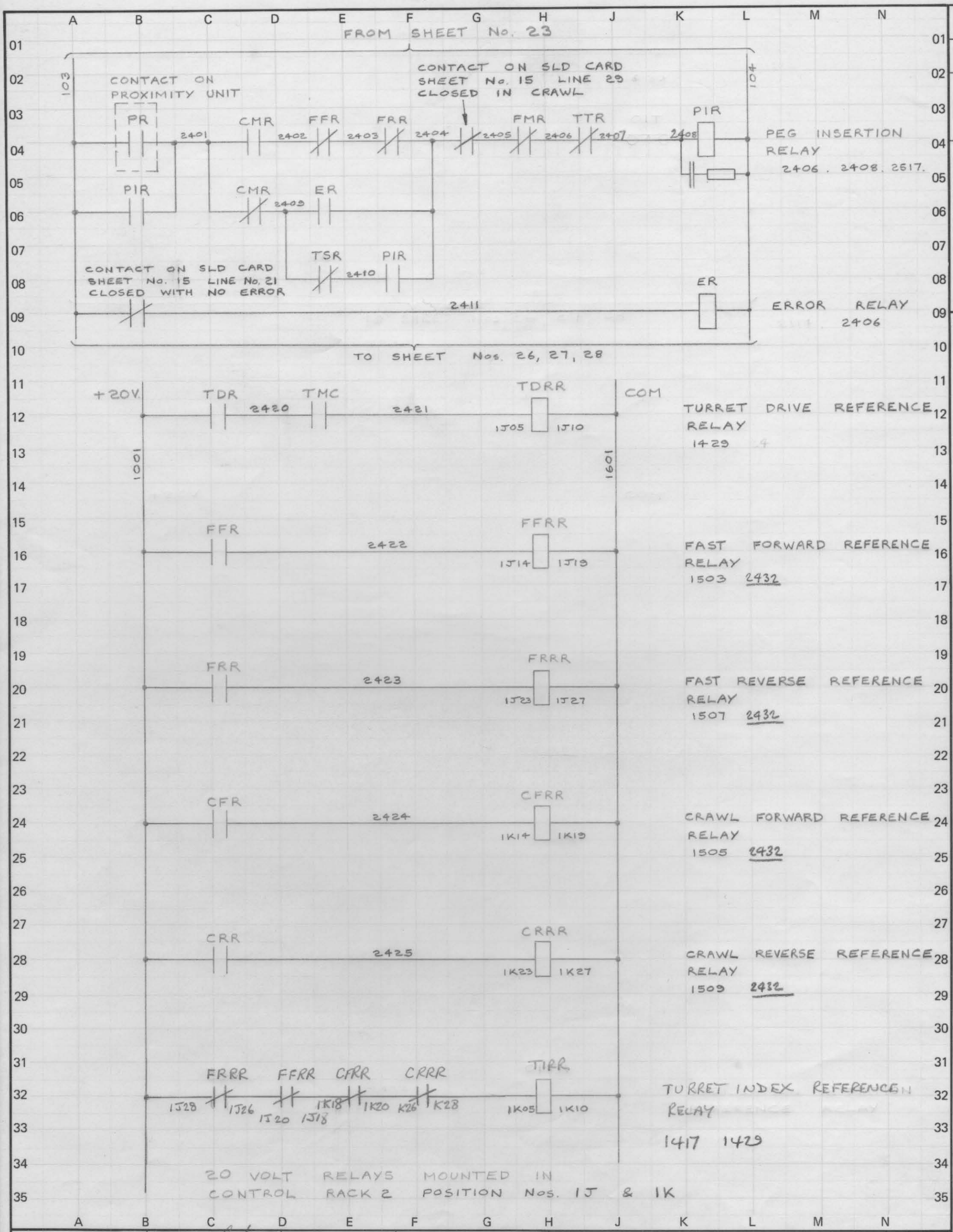


| TECHN. | ENG. | APPD. | TECHN. | ENG. | APPD. | DATE 27-2-78 | ALLENWEST Simplex | TURRET INCH RELAYS 60 TON TURRET PUNCH PRESS SCOTTISH MACHINE TOOL CORP. | IDENT DR | SH |
|---|---|---|---|---|---|---|---|---|---|---|
| | | | 2 | | | TECHN. RKW | VARIABLE SPEED DRIVES OPERATION, BRIGHTON, ENGLAND. | GO NUMBER 722N08 | ELEMENTARY DIAGRAM 902M102XD | CONTD. 25 |
| | | | | | | ENG. FRB | | | | |
| | | | | | | APPD. | | | | |

DR SH 24 CONTD. 25 ELEMENTARY DIAGRAM 902M102XD

Disclaimer Statement The ⊛ trade mark is the trade mark of General Electric Company of U.S.A. which is not connected with the English Company of a similar name.

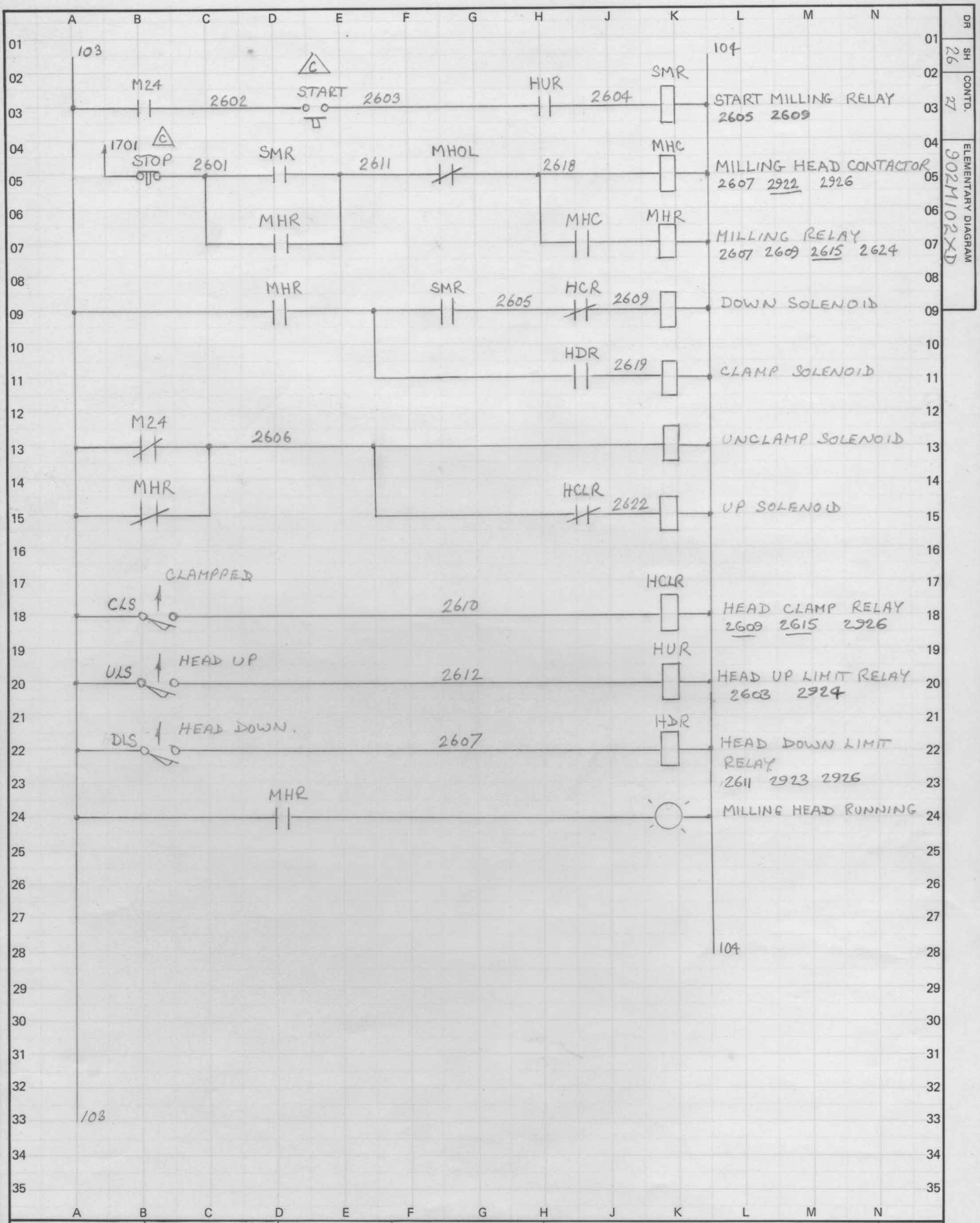


| TECHN. | ENG. | APPD. | TECHN. | ENG. | APPD. | DATE 4.4.78 | | | | | |
|---|---|---|---|---|---|---|---|---|---|---|---|
| | | | 2 | | | TECHN. R.K.W. | ALLENWEST Simplex VARIABLE SPEED DRIVES OPERATION, BRIGHTON, ENGLAND. | MILLING HEAD CIRCUITS GO TON TURRET PRESS FOR SCOTTISH MACHINE TOOL | | | IDENT |
| | | | | | 15.6.78 | ENG. | | GO NUMBER 722N08 | ELEMENTARY DIAGRAM 902M102XD | CONTD. 27 | DR / SH 26 |
| | | | | | | APPD. | | | | | |

DR SH 26 CONTD. 27 ELEMENTARY DIAGRAM 902M102XD

Disclaimer Statement The GE trade mark is the trade mark of General Electric Company of U.S.A. which is not connected with the English Company of a similar name.

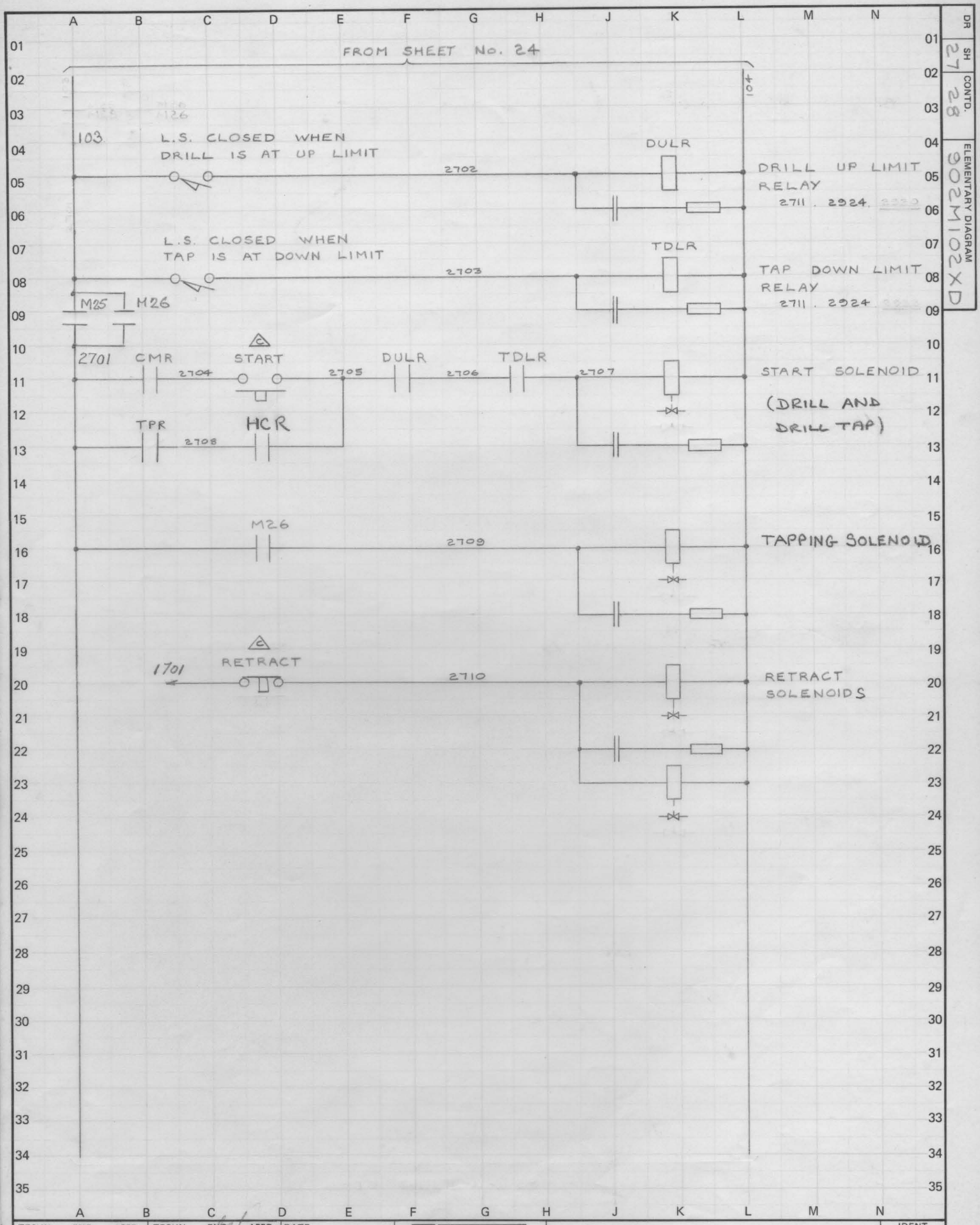


| TECHN. | ENG. | APPD. | TECHN. | ENG. | APPD. | DATE 27-2-78 | ALLENWEST Simplex | DRILL & DRILL/TAP CYCLE 60 TON TURRET PUNCH PRESS SCOTTISH MACHINE TOOL CORP. | IDENT |
|---|---|---|---|---|---|---|---|---|---|
| | | | 2 | | | TECHN. RKW | VARIABLE SPEED DRIVES OPERATION, BRIGHTON, ENGLAND. | | DR / SH |
| | | | | | | ENG. FRS | | | 27 |
| | | | | | | APPD. | | | |

| GO NUMBER | ELEMENTARY DIAGRAM | CONTD. |
|---|---|---|
| 722N08 | 902M102XD | 28 |

Disclaimer Statement The ⊛ trade mark is the trade mark of General Electric Company of U.S.A. which is not connected with the English Company of a similar name.

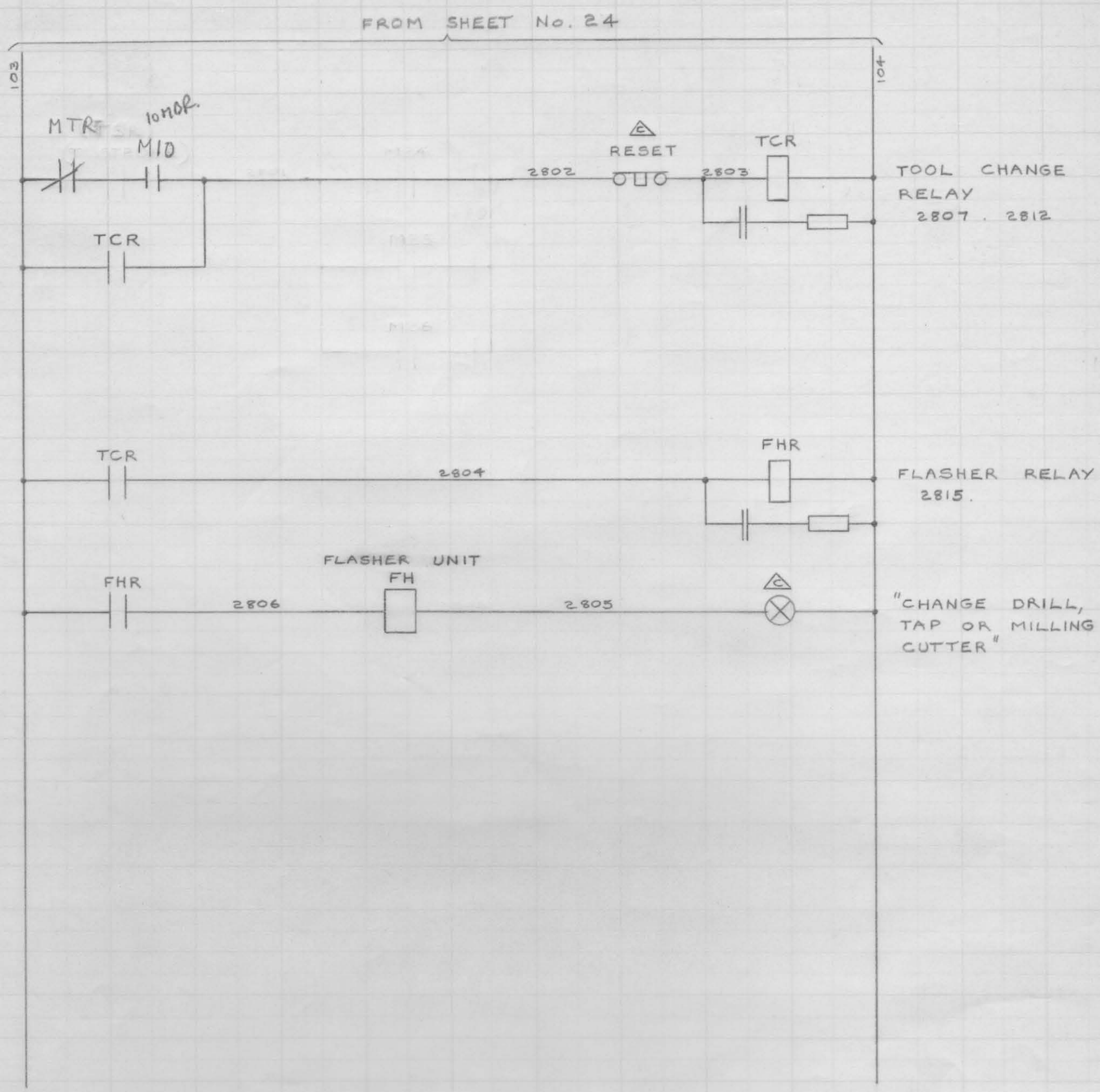


DR | SH 28 | CONTD. 29 | ELEMENTARY DIAGRAM 902M102XD

| TECHN. | ENG. | APPD. | TECHN. | ENG. | APPD. | DATE 27-2-78 |
|---|---|---|---|---|---|---|
| | | | | | | TECHN. RKW |
| | | | | | | ENG. FRS |
| | | | | | | APPD. |

ALLENWEST
Simplex
VARIABLE SPEED DRIVES OPERATION, BRIGHTON, ENGLAND.

TOOL CHANGE CIRCUIT
60 TON TURRET PUNCH PRESS
SCOTTISH MACHINE TOOL CORP.

| GO NUMBER | ELEMENTARY DIAGRAM | CONTD. |
|---|---|---|
| 722N08 | 902M102XD | 29 |

IDENT | DR | SH 28

Disclaimer Statement The ⊛ trade mark is the trade mark of General Electric Company of U.S.A. which is not connected with the English Company of a similar name.

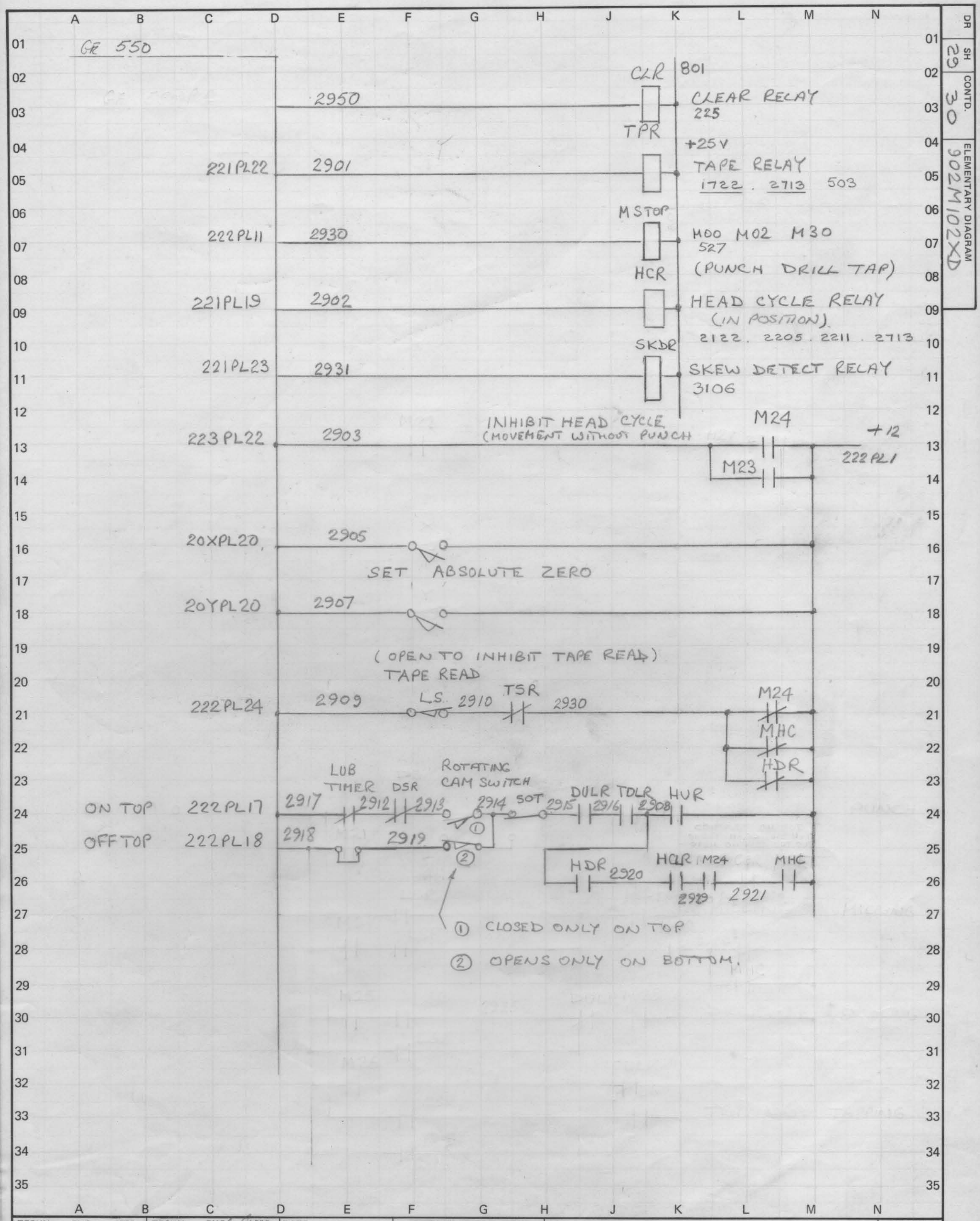


| TECHN. | ENG. | APPD. | TECHN. | ENG. | APPD. | DATE 27-2-78 | ALLENWEST Simplex | TAPE INPUT CIRCUITS | IDENT |
|---|---|---|---|---|---|---|---|---|---|
| | | | 2/2 | | | TECHN. RKW | VARIABLE SPEED DRIVES OPERATION, BRIGHTON, ENGLAND. | 60 TON TURRET PUNCH PRESS | DR / SH |
| | | | | | | ENG. FRS | | SCOTTISH MACHINE TOOL CORP. | 29 |
| | | | | | | APPD. | | GO NUMBER 722N08 / ELEMENTARY DIAGRAM 902M102XD / CONTD. 30 | |

Disclaimer Statement The trade mark is the trade mark of General Electric Company of U.S.A. which is not connected with the English Company of a similar name.

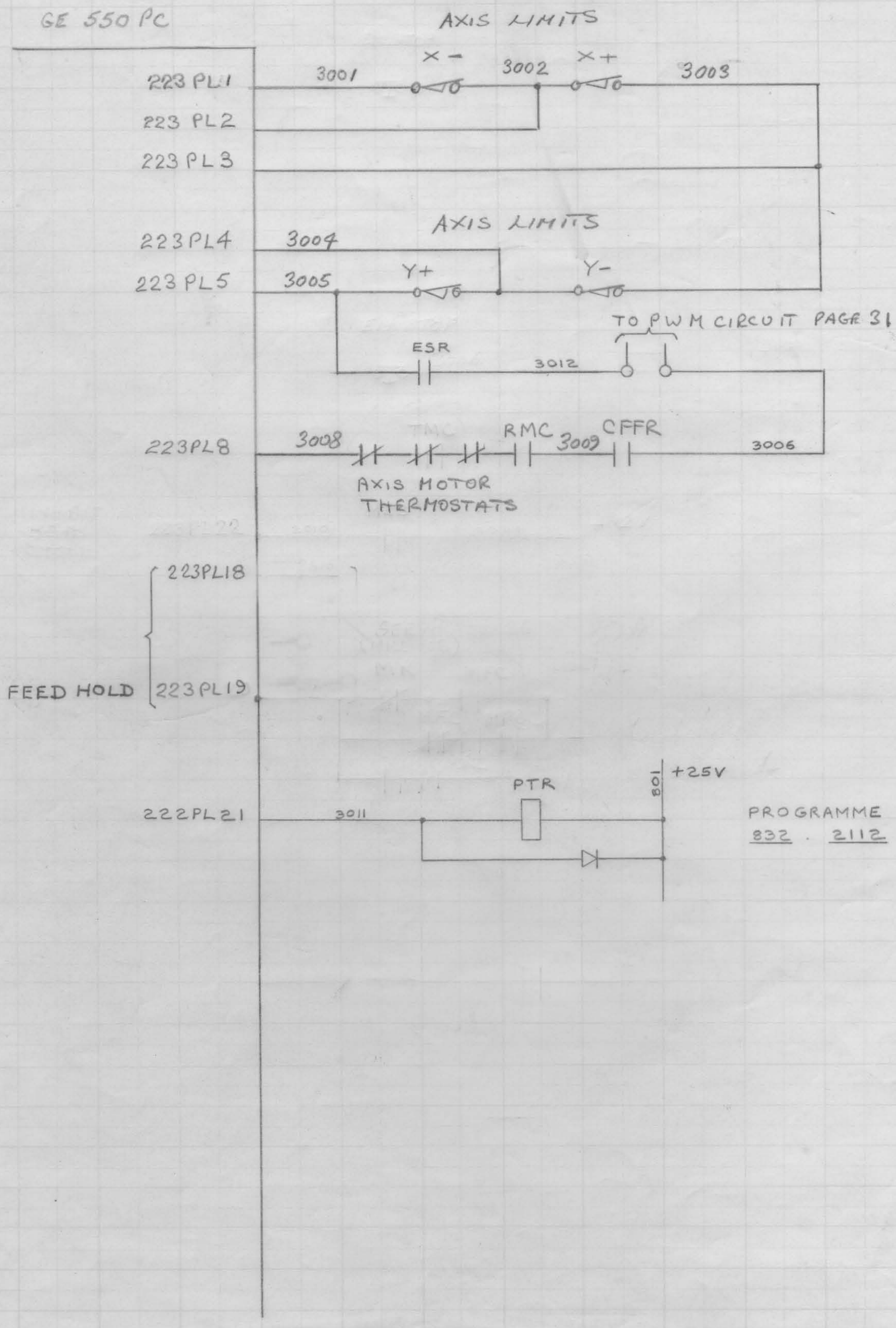


DR
SH 30
CONTD. 31
ELEMENTARY DIAGRAM 902M102XD

| TECHN. | ENG. | APPD. | TECHN. | ENG. | APPD. | DATE 27-2-78 | ALLENWEST Simplex | TAPE INPUT CIRCUITS | IDENT |
|---|---|---|---|---|---|---|---|---|---|
| | | | 2/2 | | | TECHN. RKW | VARIABLE SPEED DRIVES OPERATION, BRIGHTON, ENGLAND. | 60 TON TURRET PUNCH PRESS | DR / SH 30 |
| | | | | | | ENG. FRS | | SCOTTISH MACHINE TOOL CORP. | |
| | | | | | | APPD. | | GO NUMBER 722N08 / ELEMENTARY DIAGRAM 902M102XD / CONTD. 31 | |

Disclaimer Statement The trade mark is the trade mark of General Electric Company of U.S.A. which is not connected with the English Company of a similar name

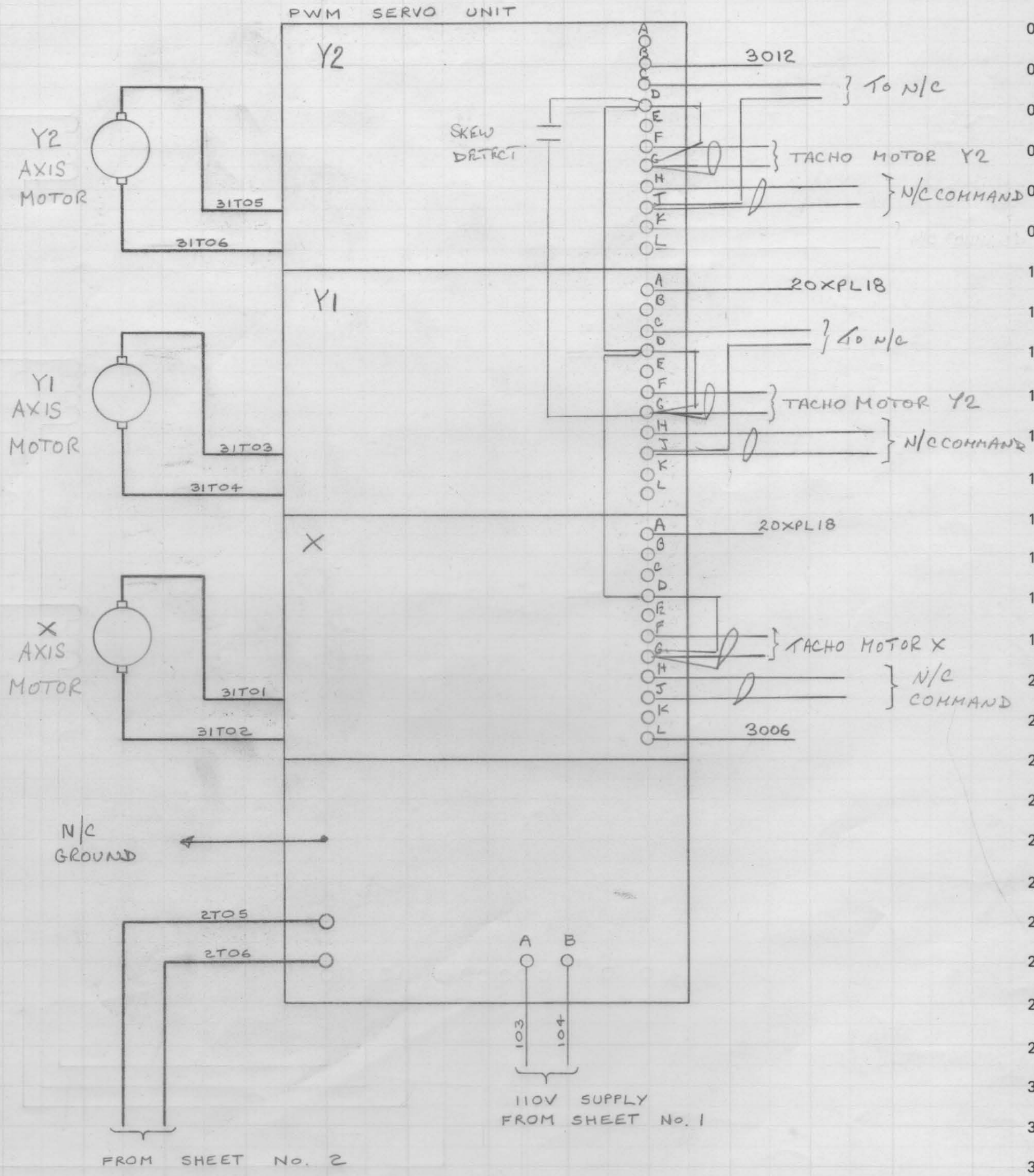


DR | SH 31 | CONTD. 32 | ELEMENTARY DIAGRAM 902M102XD

| TECHN. | ENG. | APPD. | TECHN. | ENG. | APPD. | DATE 27-2-78 |
|---|---|---|---|---|---|---|
| | | | 2 | | | TECHN. RKW |
| | | | | | | ENG. FRS |
| | | | | | | APPD. |

ALLENWEST Simplex GE
VARIABLE SPEED DRIVES OPERATION, BRIGHTON, ENGLAND.

PWM SERVO UNIT
60 TON TURRET PUNCH PRESS
SCOTTISH MACHINE TOOL CORP.

| GO NUMBER | ELEMENTARY DIAGRAM | CONTD. |
|---|---|---|
| 722N08 | 902M102XD | 32 |

IDENT | DR | SH 31

Disclaimer Statement The GE trade mark is the trade mark of General Electric Company of U.S.A., which is not connected with the English Company of a similar name.

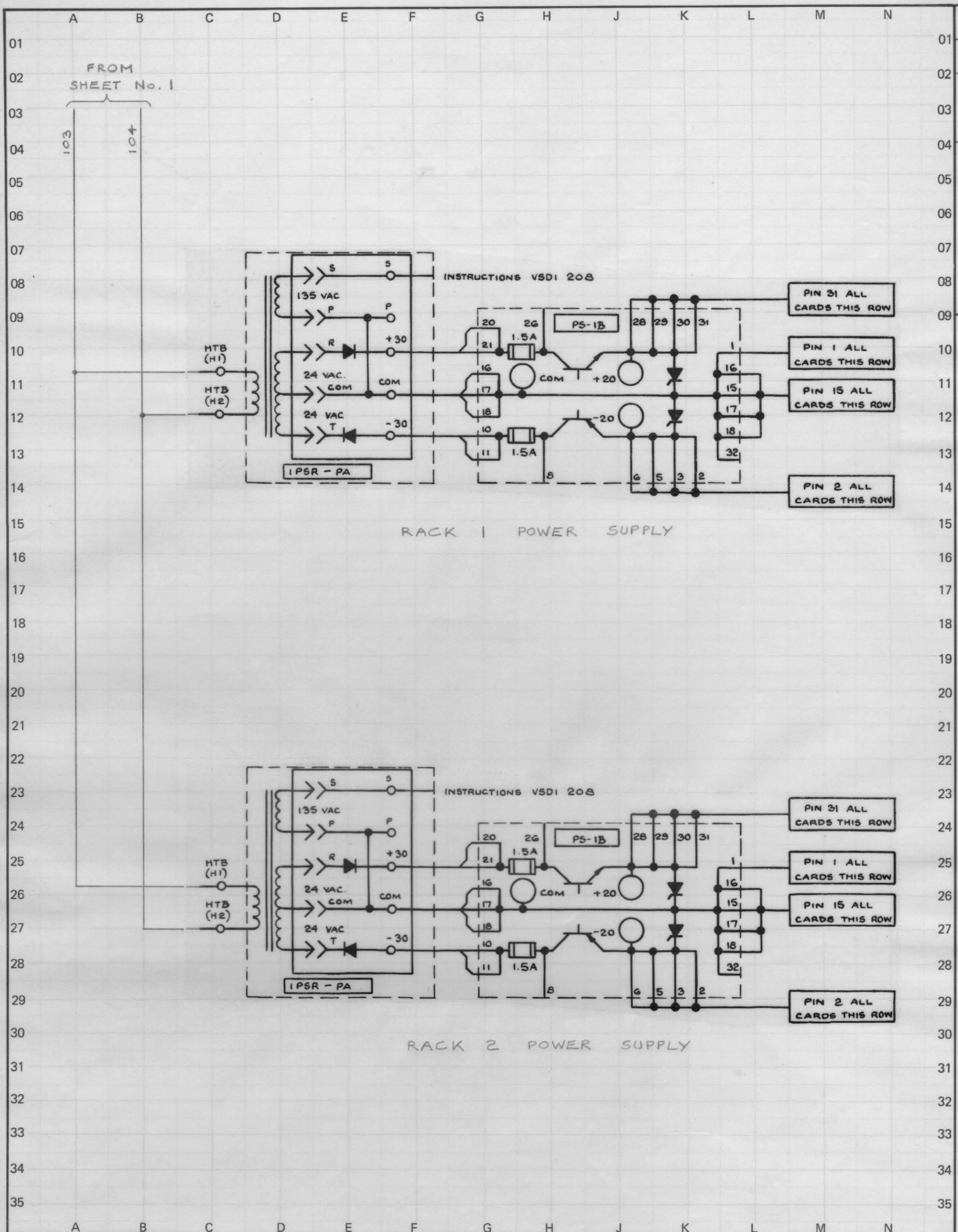


| TECHN. | ENG. | APPD. | TECHN. | ENG. | APPD. | DATE 27-2-78 | ALLENWEST Simplex GE | RACK POWER SUPPLY CIRCUITS 60 TON TURRET PUNCH PRESS SCOTTISH MACHINE TOOL CORP. | IDENT |
|---|---|---|---|---|---|---|---|---|---|
| | | | 2 | | | TECHN. RKW | VARIABLE SPEED DRIVES OPERATION, BRIGHTON, ENGLAND. | | DR / SH |
| | | | | | | ENG. FRS | | | |
| | | | | | | APPD. | | GO NUMBER 722N08 / ELEMENTARY DIAGRAM 902M102XD / CONTD. 33 | 32 |

DR SH 32 CONTD. 33 ELEMENTARY DIAGRAM 902M102XD

Disclaimer Statement The GE trade mark is the trade mark of General Electric Company of U.S.A., which is not connected with the English Company of a similar name.

FUNCTIONAL BLOCK DIAGRAM

SIGNAL LEVEL DETECTOR.

G01 SLA

G02 SLA & SLB

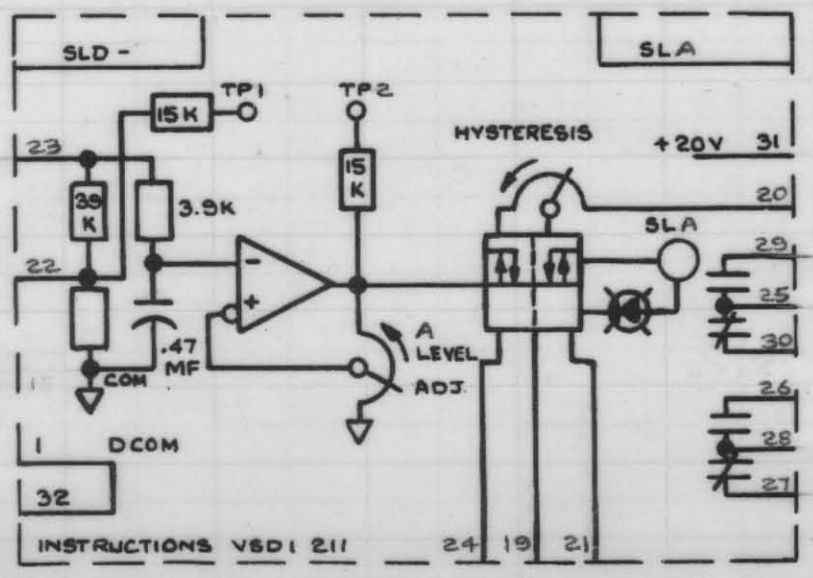


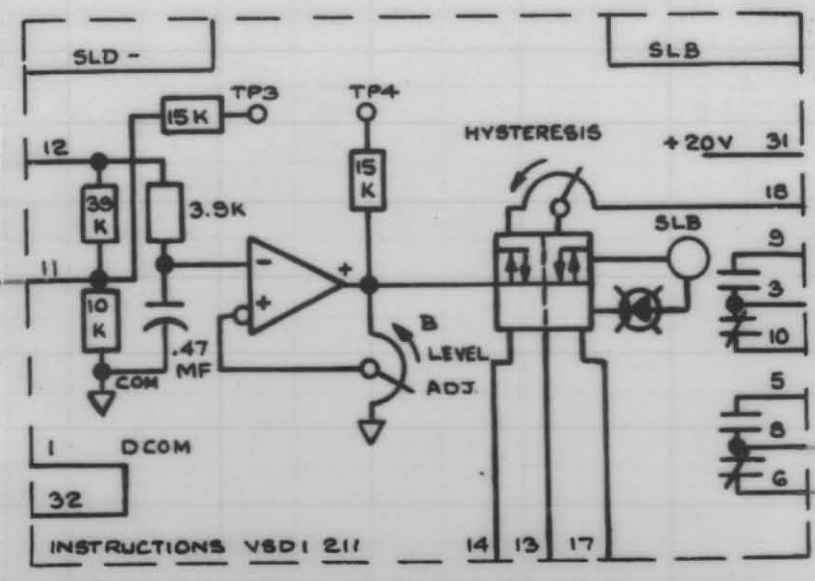


FROM 1410
SHEET 14 LINE 16
APPROACH
POSITION SIGNAL

SHEET 14 LINE 29

FITTED IN POSITION No. 1P IN RACK 2

| TECHN. | ENG. | APPD. | TECHN. RKW | ENG. | APPD. | DATE 27-2-78 |
|---|---|---|---|---|---|---|
| | | | | | | TECHN. RKW |
| | | | | | | ENG. FRS |
| | | | 2 | 12-6-78 | | APPD. |

ALLENWEST Simplex

VARIABLE SPEED DRIVES OPERATION, BRIGHTON, ENGLAND.

FEED CUT-OUT CIRCUIT
60 TON TURRET PUNCH PRESS
SCOTTISH MACHINE TOOL CORP.

| GO NUMBER | ELEMENTARY DIAGRAM | CONTD. |
|---|---|---|
| 722N08 | 902M102XD | 34 |

IDENT

DR | SH 33

CONTD. 34

ELEMENTARY DIAGRAM 902M102XD

Disclaimer Statement The GE trade mark is the trade mark of General Electric Company of U.S.A. which is not connected with the English Company of a similar name.

# RACK 1

| 1A | 1B | 1C | 1D | 1E | 1F | 1G | 1H | 1J | 1K | 1L | 1M | 1N | 1P | 1Q |
|---|---|---|---|---|---|---|---|---|---|---|---|---|---|---|
| | PS | | | | | | | | | | | | | |
| BEFORE REPLACING FUSE(S) ON PWR. SUP. CARD CHECK FOR POSSIBLE SHORT(S) ACROSS THE OUTPUT(S). REPLACE WITH THE SAME TYPE & RATING (SPARE FUSES ARE MOUNTED ON THE CARD) | 193W 257 AAG01 | | | | 193W 264 AAG02 | | | 193W 264 AAG02 | | | 193W 264 AAG02 | | | 193W 264 AAG02 |
| | +20V• | | 1 | ⊘ | | 5 | ⊘ | | 9 | ⊘ | | 13 | ⊘ | |
| | 1·5A | | 2 | ⊘ | | 6 | ⊘ | | 10 | ⊘ | | 14 | ⊘ | |
| | -20V• | | 3 | ⊘ | | 7 | ⊘ | | 11 | ⊘ | | 15 | ⊘ | |
| | 1·5A | | 4 | ⊘ | | 8 | ⊘ | | 12 | ⊘ | | 16 | ⊘ | |
| | COM• | | | | | | | | | | | | | |
| 20V. POWER SUPPLY | | | COMPONENT SEE SHEET | | CARD No. 36 | COMPONENT SEE SHEET | | CARD No. 36 | COMPONENT SEE SHEET | | CARD No. 36 | COMPONENT SEE SHEET | | CARD No. 36 |

| 2A | 2B | 2C | 2D | 2E | 2F | 2G | 2H | 2J | 2K | 2L | 2M | 2N | 2P | 2Q |
|---|---|---|---|---|---|---|---|---|---|---|---|---|---|---|
| | | | | | | | | | | | | | | |
| | | 193W 264 AAG02 | | | 193W 264 AAG02 | | | 193W 264 AAG02 | | | 193W 264 AAG02 | | | 193W 264 AAG02 |
| 17 | ⊘ | | 21 | ⊘ | | S | ⊘ | | S | ⊘ | | TEST | ⊘ | |
| 18 | ⊘ | | 22 | ⊘ | | S | ⊘ | | S | ⊘ | | | | |
| 19 | ⊘ | | 23 | ⊘ | | S | ⊘ | | S | ⊘ | | | | |
| 20 | ⊘ | | 24 | ⊘ | | S | ⊘ | | S | ⊘ | | | | |
| COMPONENT SEE SHEET | | CARD No. 36 | COMPONENT SEE SHEET | | CARD No. 36 | COMPONENT SEE SHEET | | CARD No. 36 | COMPONENT SEE SHEET | | CARD No. 36 | COMPONENT SEE SHEET | | CARD No. |

S= SPARE

SYMBOLS

• - TEST POST

⊘ - POT. ADJUSTMENT

| TECHN. | ENG. | APPD. | TECHN. | ENG. | APPD. | DATE 27-2-78 | ALLENWEST Simplex | LAYOUT OF CARDS IN RACK 1 | IDENT |
|---|---|---|---|---|---|---|---|---|---|
| | | | 2 | | | TECHN. RKW | VARIABLE SPEED DRIVES OPERATION, BRIGHTON, ENGLAND. | 60 TON TURRET PUNCH PRESS | DR / SH 34 |
| | | | | | | ENG. FRS | | SCOTTISH MACHINE TOOL CORP. | |
| | | | | | | APPD. | | GO NUMBER 722N08 / ELEMENTARY DIAGRAM 902M102XD / CONTD. 35 | |

DR | SH 34 | CONTD. 35 | ELEMENTARY DIAGRAM 902M102XD

Disclaimer Statement The ⊕ trade mark is the trade mark of General Electric Company of U.S.A. which is not connected with the English Company of a similar name.

# RACK 2

| 1A | 1B | 1C | 1D | 1E | 1F | 1G | 1H | 1J | 1K | 1L | 1M | 1N | 1P | 1Q |
|---|---|---|---|---|---|---|---|---|---|---|---|---|---|---|
| BEFORE REPLACING FUSE(S) ON PWR. SUP. CARD CHECK FOR POSSIBLE SHORT(S) ACROSS THE OUTPUT(S). REPLACE WITH THE SAME TYPE & RATING. (SPARE FUSES ARE MOUNTED ON THE CARD) | 193W 257 AAG01 | 193X 256 AAG01 | | 193X 264 AAG01 | 193X 264 AAG01 | | | 193X 278 AAG03 | 193X 278 AAG03 | | | 193X 277 AAG02 | 193X 277 AAG02 | |
| | +20V• | 801 | | | RAPID FWD | | | | | | | | | |
| | | 802 | | SET OVER-SHOOT | CREEP FWD | | | FFRR | CFRR | | | | | |
| | 1·5A | 1LIM+ | | | RAPID REV | | | | | | | | | |
| | | 1LIM− | | | CREEP REV. | | | FRRR | CRRR | | | | | |
| | −20V• | 803 | | | | | | | | | | | | |
| | | 804 | | | | | | | | | | | | |
| | | 2LIM+ | | | | | | TDRR | TIRR | | | | | |
| | 1·5A | 2LIM− | | | | | | | | | | | | |
| | COM• | | | COMP. CARD SEE SHEET No. | COMP. CARD SEE SHEET No. | | | 20V RELAYS | 20V RELAYS | | | SLD | SLD | |
| 20V. POWER SUPPLY | | AMP. | | | | | | | | | | | | |

| 2A | 2B | 2C | 2D | 2E | 2F | 2G | 2H | 2J | 2K | 2L | 2M | 2N | 2P | 2Q |
|---|---|---|---|---|---|---|---|---|---|---|---|---|---|---|
| | | | | | | | | | | | | | | |

SYMBOLS

• - TEST POST

⊘ - POT. ADJUSTMENT

| TECHN. | ENG. | APPD. | TECHN. | ENG. | APPD. | DATE 27-2-78 | ALLENWEST Simplex VARIABLE SPEED DRIVES OPERATION, BRIGHTON, ENGLAND. | LAYOUT OF CARDS IN RACK 2 60 TON TURRET PUNCH PRESS SCOTTISH MACHINE TOOL CORP. | IDENT |
|---|---|---|---|---|---|---|---|---|---|
| | | | 2 | | | TECHN. RKW | | | DR / SH 35 |
| | | | | | | ENG. FRS | | GO NUMBER 722N08 / ELEMENTARY DIAGRAM 902M102XD / CONTD. 36 | |
| | | | | | | APPD. | | | |

Disclaimer Statement The GE trade mark is the trade mark of General Electric Company of U.S.A., which is not connected with the English Company of a similar name.

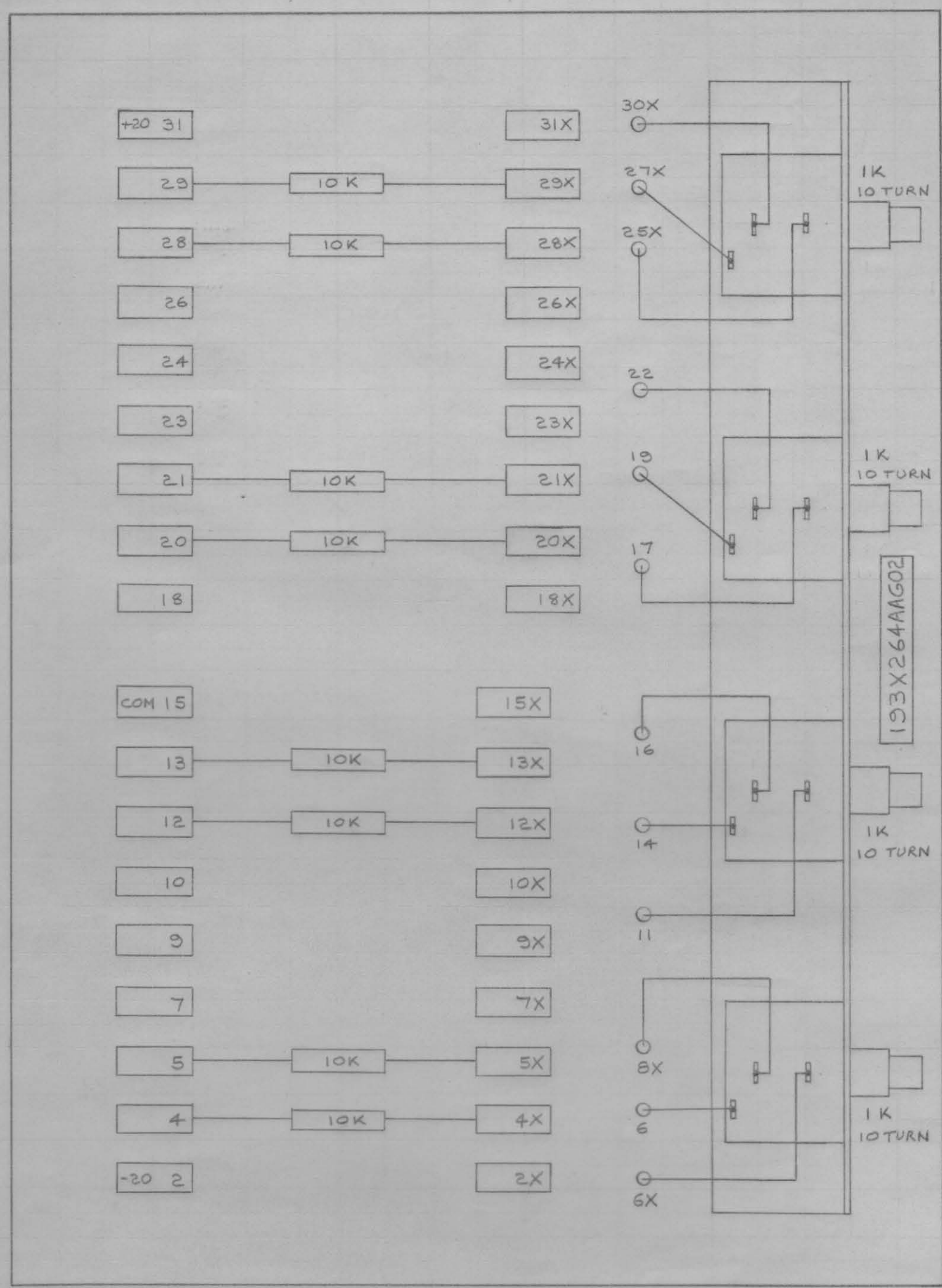


FITTED IN POSITIONS 1F, 1J, 1M, 1Q, 2C, 2F, 2J, 2M & 2Q IN RACK 1

| TECHN. | ENG. | APPD. | TECHN. | ENG. | APPD. | DATE 27-2-78 | ALLENWEST Simplex VARIABLE SPEED DRIVES OPERATION, BRIGHTON, ENGLAND. | COMPONENT CARD 60 TON TURRET PUNCH PRESS SCOTTISH MACHINE TOOL CORP. | IDENT DR | SH |
|---|---|---|---|---|---|---|---|---|---|---|
| | | | 2 | | | TECHN. RKW | | | | |
| | | | | | | ENG. FRS | | | | |
| | | | | | | APPD. | | GO NUMBER 722N08 / ELEMENTARY DIAGRAM 902M102XD / CONTD. 37 | | 36 |

DR | SH 36 | CONTD. 37 | ELEMENTARY DIAGRAM 902M102XD

Disclaimer Statement The GE trade mark is the trade mark of General Electric Company of U.S.A., which is not connected with the English Company of a similar name.

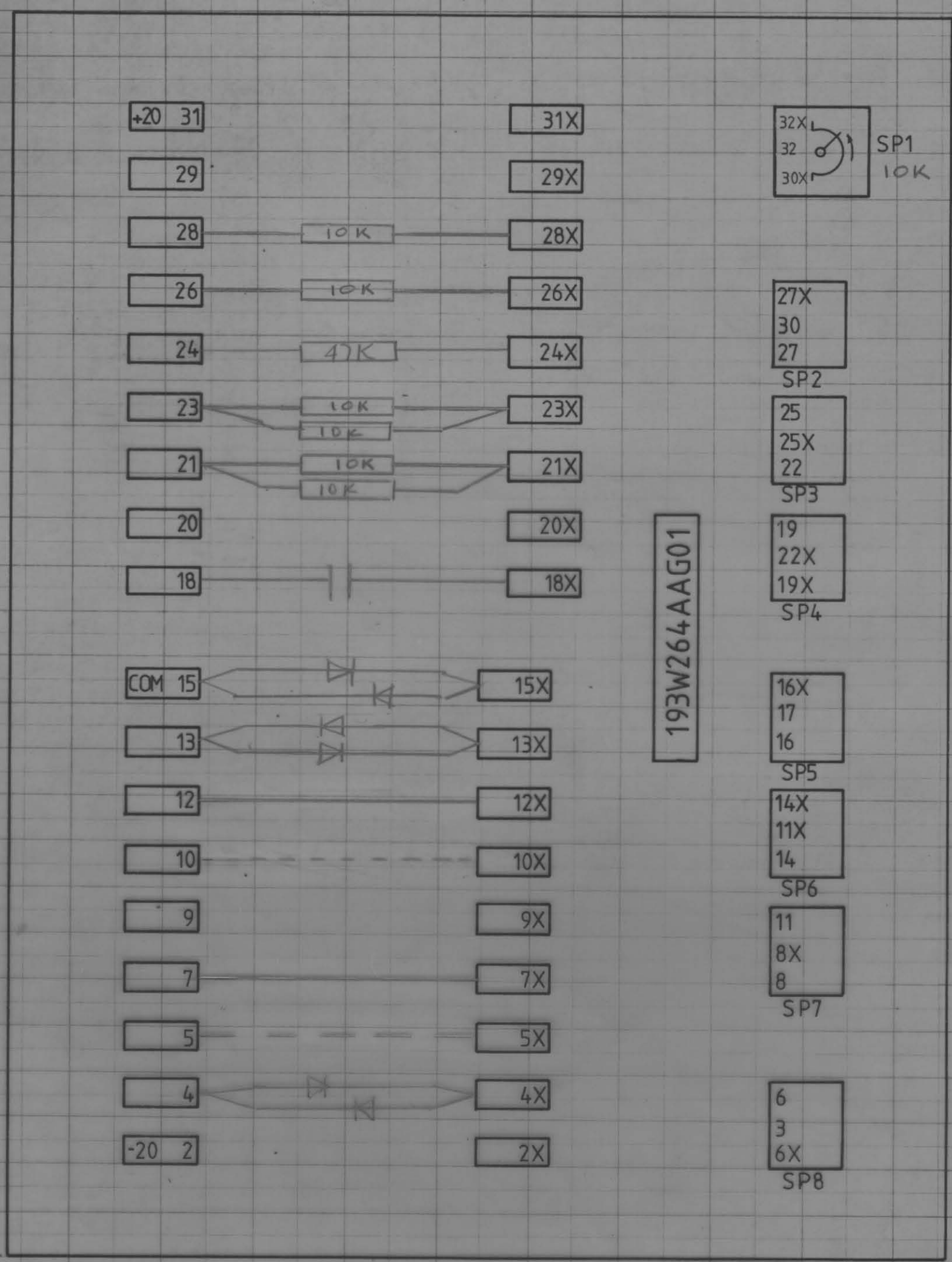


FITTED IN POSITION 1E OF RACK 2

902HM100AF Sheet 1

| TECHN. | ENG. | APPD. | TECHN. | ENG. | APPD. | DATE 27-2-78 | ALLENWEST Simplex | COMPONENT CARD | IDENT |
|---|---|---|---|---|---|---|---|---|---|
| | | | 2 | | | TECHN. RKW | VARIABLE SPEED DRIVES OPERATION, BRIGHTON, ENGLAND. | 60 TON TURRET PUNCH PRESS | DR / SH |
| | | | | | | ENG. FRS | | SCOTTISH MACHINE TOOL CORP. | |
| | | | | | | APPD. | | GO NUMBER 722N08 / ELEMENTARY DIAGRAM 902M102XD / CONTD. 38 | 37 |

DR SH 37 CONTD. 38 ELEMENTARY DIAGRAM 902M102XD

Disclaimer Statement The trade mark is the trade mark of General Electric Company of U.S.A., which is not connected with the English Company of a similar name

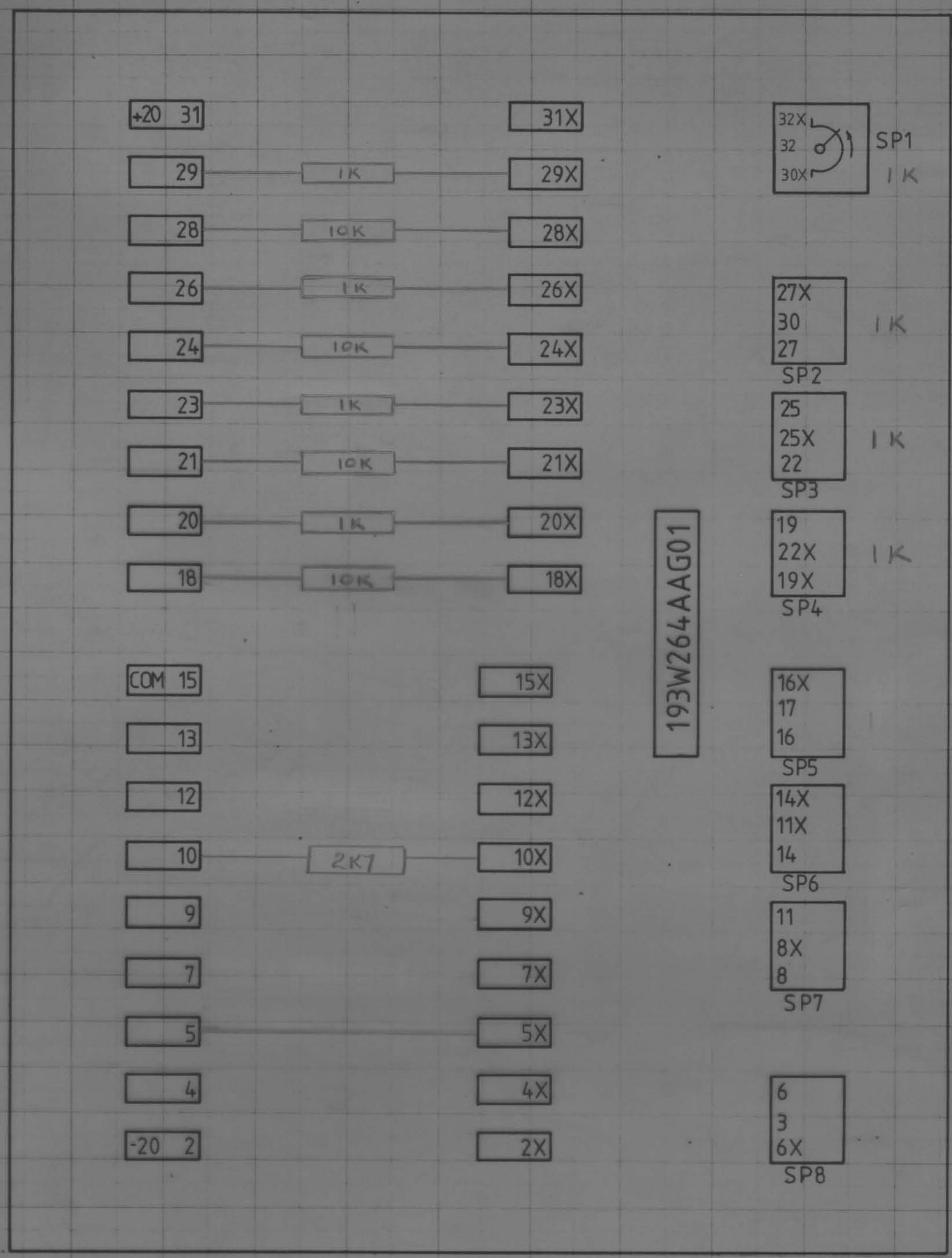


FITTED IN POSITION 1F OF RACK 2

902HM100AP Sheet 1

| TECHN. | ENG. | APPD. | TECHN. | ENG. | APPD. | DATE 27-2-78 | ALLENWEST Simplex VARIABLE SPEED DRIVES OPERATION, BRIGHTON, ENGLAND. | COMPONENT CARD 60 TON TURRET PUNCH PRESS SCOTTISH MACHINE TOOL CORP. | IDENT |
|---|---|---|---|---|---|---|---|---|---|
| | | | 2 | | | TECHN. RKW | | | |
| | | | | | | ENG. FRS | | | |
| | | | | | | APPD. | | GO NUMBER 722N08 / ELEMENTARY DIAGRAM 902M102XD / CONTD. 39 | DR / SH 38 |

DR SH 38 CONTD. 39 ELEMENTARY DIAGRAM 902M102XD

Disclaimer Statement The trade mark is the trade mark of General Electric Company of U.S.A., which is not connected with the English Company of a similar name.

TB2

| 1 | 2 | 3 | 4 | 5 | 6 | 7 | 8 | 9 | 10 | 11 | 12 | 13 | 14 | 15 | 16 | 17 | 18 | 19 | 20 | 21 | 22 | 23 | 24 | 25 | 26 | 27 | 28 | 29 | 30 | 31 | 32 | 33 | 34 | 35 | 36 | 37 | 38 | 39 | 40 | 41 | 42 | 43 | 44 | 45 | 46 | 47 | 48 | 49 | 50 | 51 | 52 | 53 | 54 | 55 | 56 | 57 | 58 | 59 | 60 | 61 |
|---|---|---|---|---|---|---|---|---|---|---|---|---|---|---|---|---|---|---|---|---|---|---|---|---|---|---|---|---|---|---|---|---|---|---|---|---|---|---|---|---|---|---|---|---|---|---|---|---|---|---|---|---|---|---|---|---|---|---|---|---|
| 1A | 1B | 1C | 2A | 2B | 2C | A | AA | X | XX | 1601 | 1602 | 1403 | 1404 | 1601 | | 103 | 103 | 104 | 104 | 1716 | 1717 | 1718 | 1801 | 1803 | 1805 | 1808 | 1809 | 1811 | 1814 | 1815 | 1901 | 1903 | 1905 | 1908 | 1909 | 1911 | 1914 | 1915 | 2001 | 2003 | 2005 | 2008 | 2009 | 2011 | 2014 | 2015 | 2101 | 2102 | 2107 | 2112 | 2115 | 2118 | 2119 | 2305 | 2306 | 2307 | 2510 | 2516 | | | |

MOTORS

TACHO. GEN.

POSITION FEEDBACK POT.

PUSHBUTTONS, SWITCHES, ETC. MOUNTED ON FRAME

TB2 (CONT^D)

| 62 | 63 | 64 | 65 | 66 | 67 | 68 | 69 | 70 | 71 | 72 | 73 | 74 | 75 | 76 | 77 | 78 | 79 | 80 | 81 | 82 | 83 | 84 | 85 | 86 | 87 | 88 | 89 | 90 | 91 | 92 | 93 | 94 | 95 | 96 | 97 | 98 | 99 | 100 | 101 | 102 | 103 | 104 | 105 | 106 | 107 | 108 | 109 | 110 | 111 | 112 | 113 | 114 | 115 | 116 | 117 | 118 | 119 | 120 | 121 | 122 | 123 | 124 | 125 | 126 |
|---|---|---|---|---|---|---|---|---|---|---|---|---|---|---|---|---|---|---|---|---|---|---|---|---|---|---|---|---|---|---|---|---|---|---|---|---|---|---|---|---|---|---|---|---|---|---|---|---|---|---|---|---|---|---|---|---|---|---|---|---|---|---|---|---|---|
| 1806 | 1906 | 2006 | 2111 | 2113 | 2117 | 2123 | 2124 | 2126 | 2210 | 2213 | 2310 | 2311 | 2401 | 2601 | 2607 | 2608 | 2610 | 2612 | 2613 | 2701 | 2702 | 2703 | 2904 | 2905 | 2907 | 2909 | 2910 | 2912 | 2913 | 2914 | 2917 | 2919 | 3001 | 3002 | 3003 | 3004 | 3005 | | | | | | 2502 | 2503 | 2504 | 2505 | 2506 | 2507 | 2508 | 2509 | 2511 | 2512 | 2513 | 2514 | 2515 | 2517 | 2606 | 2609 | 2707 | 2709 | 2710 | | | |

LIMIT SWITCHES

SOLENOIDS

TB2 IS MOUNTED AT BOTTOM OF LH CUBICLE

TB3

| 1 | 2 | 3 | 4 | 5 | 6 | 7 | 8 | 9 | 10 | 11 | 12 | 13 | 14 | 15 | 16 | 17 | 18 | 19 | 20 | 21 | 22 | 23 | 24 | 25 | 26 | 27 | 28 | 29 | 30 | 31 | 32 | 33 | 34 | 35 | 36 | 37 | 38 | 39 | 40 | 41 | 42 | 43 | 44 | 45 | 46 | 47 | 48 | 49 | 50 | 51 | 52 | 53 | 54 | 55 | 56 | 57 | 58 | 59 | 60 |
|---|---|---|---|---|---|---|---|---|---|---|---|---|---|---|---|---|---|---|---|---|---|---|---|---|---|---|---|---|---|---|---|---|---|---|---|---|---|---|---|---|---|---|---|---|---|---|---|---|---|---|---|---|---|---|---|---|---|---|---|---|
| 31T01 | 31T02 | 31T03 | 31T04 | 31T05 | 31T06 | 1T06 | 1T07 | | | | | | | | | | | | | | | | | | | | | | | | | | | 2615 | 2617 | 1601 | 2905 | 2907 | 801 | 802 | 803 | 804 | 805 | 806 | 807 | 808 | 2901 | 2902 | 301 | 302 | 303 | 304 | 305 | 306 | 307 | 308 | 309 | 310 | 2904 |

AXIS MOTORS

550PC TAPE SUPPLY

550PC TAPE

20X

20Y

221 PL

222PL

EARTH (IF REQUIRED)

TB3 (CONT^D)

| 61 | 62 | 63 | 64 | 65 | 66 | 67 | 68 | 69 | 70 | 71 | 72 | 73 | 74 | 75 | 76 | 77 | 78 | 79 | 80 | 81 | 82 | 83 | 84 | 85 | 86 | 87 | 88 | 89 | 90 | 91 | 92 | 93 | 94 | 95 | 96 | 97 | 98 | 99 | 100 | 101 | 102 | 103 | 104 | 105 | 106 | 107 | 108 | 109 | 110 | 111 | 112 | 113 | 114 | 115 | 116 | 117 | 118 | 119 | 120 | 121 | 122 | 123 | 124 | 125 | 126 | 127 |
|---|---|---|---|---|---|---|---|---|---|---|---|---|---|---|---|---|---|---|---|---|---|---|---|---|---|---|---|---|---|---|---|---|---|---|---|---|---|---|---|---|---|---|---|---|---|---|---|---|---|---|---|---|---|---|---|---|---|---|---|---|---|---|---|---|---|---|---|
| 2905 | 2917 | 2918 | 3011 | | 2903 | 3001 | 3002 | 3003 | 3004 | 3005 | 3008 | 3010 | | | | 103 | 104 | 512 | 514 | 516 | 517 | 1702 | 1711 | 1712 | 1713 | 1714 | 1715 | 1716 | 1717 | 1718 | 1719 | 1720 | 1721 | 2102 | 2103 | 2104 | 2105 | 2106 | 2119 | 2121 | 2124 | 2128 | 2302 | 2303 | 2304 | 2305 | 2306 | 2312 | 2313 | 2314 | 2512 | 2517 | 2601 | 2602 | 2603 | 2613 | 2614 | 2701 | 2704 | 2705 | 2710 | 2802 | 2803 | 2805 | 3006 | 3012 |

222PL

223 PL

PUSHBUTTONS, LAMPS & SWITCHES MOUNTED ON TAPE UNIT.

TB3 IS MOUNTED AT BOTTOM OF RH CUBICLE

| TECHN. | ENG. | APPD. | TECHN. | ENG. | APPD. | DATE 27-2-78 |
|---|---|---|---|---|---|---|
| | | | 2 | | | TECHN. RKW |
| | | | | | | ENG. FRS |
| | | | | | | APPD. |

ALLENWEST

Simplex

VARIABLE SPEED DRIVES OPERATION, BRIGHTON, ENGLAND.

ARRANGEMENT OF OUTGOING TERM^LS
60 TON TURRET PUNCH PRESS
SCOTTISH MACHINE TOOL CORP.

| GO NUMBER | ELEMENTARY DIAGRAM | CONTD. |
|---|---|---|
| 722N08 | 902M102XD | 40 |

IDENT

| DR | SH |
|---|---|
| | 39 |

DR SH 39 CONTD. 40 ELEMENTARY DIAGRAM 902M102XD

Disclaimer Statement The ⊕ trade mark is the trade mark of General Electric Company of U.S.A., which is not connected with the English Company of similar name.

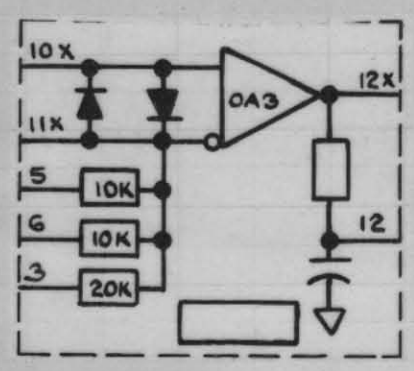


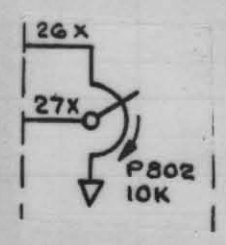


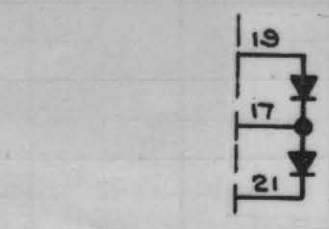


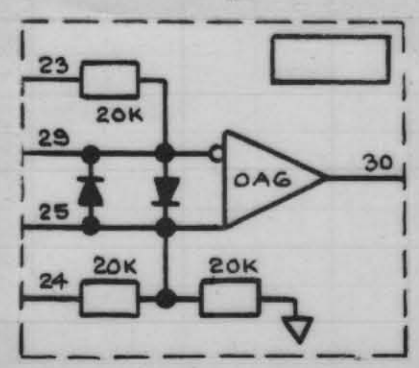


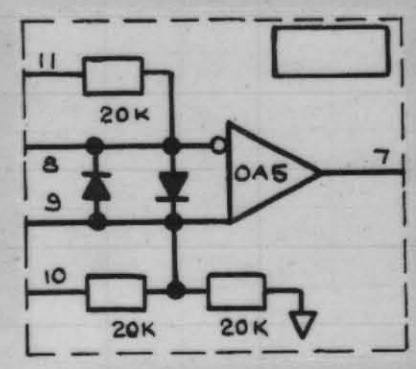


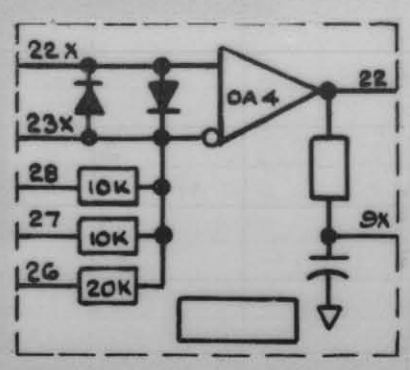


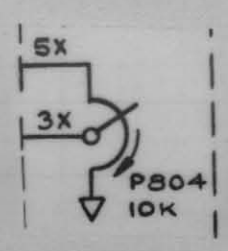


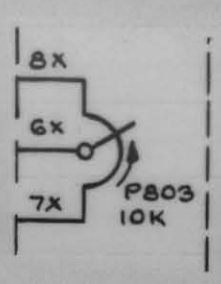


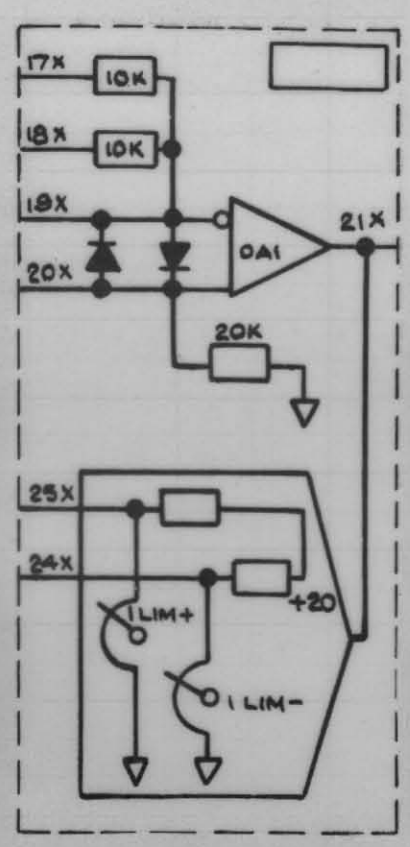


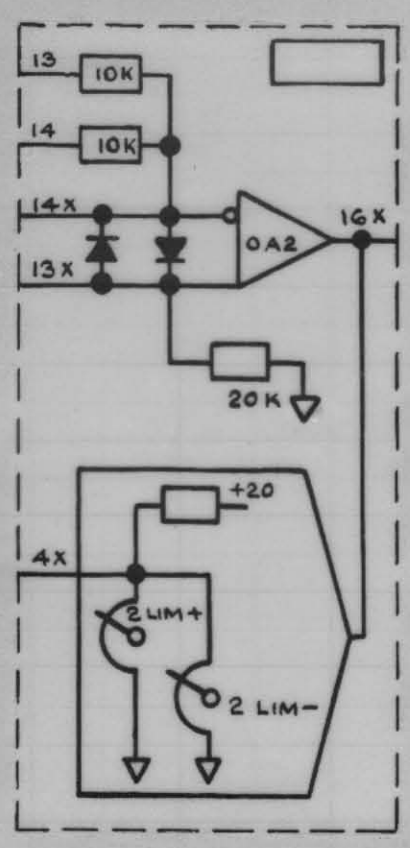


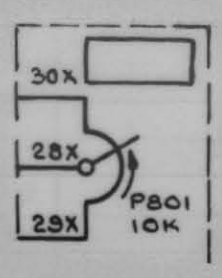


INSTRUCTIONS VSD1 207

FOR AMPLIFIER CONNECTIONS SEE SHEET No. 14

MOUNTED IN RACK 2 POSITION 1.C.

| TECHN. | ENG. | APPD. | TECHN. | ENG. | APPD. | DATE 27-2-78 | ALLENWEST Simplex VARIABLE SPEED DRIVES OPERATION, BRIGHTON, ENGLAND. | FUNCTIONAL BLOCK DIAGRAM OF AMPLIFIERS 60 TON TURRET PUNCH PRESS SCOTTISH MACHINE TOOL CORP. | IDENT |
|---|---|---|---|---|---|---|---|---|---|
| | | | 2 | | | TECHN. RKW | | | DR / SH |
| | | | | | | ENG. FRS | | | |
| | | | | | | APPD. | | GO NUMBER 722N08 / ELEMENTARY DIAGRAM 902M102XD / CONTD. 41 | 40 |

DR SH 40 CONTD. 41 ELEMENTARY DIAGRAM 902M102XD

Disclaimer Statement The trade mark is the trade mark of General Electric Company of U.S.A. which is not connected with the English Company of similar

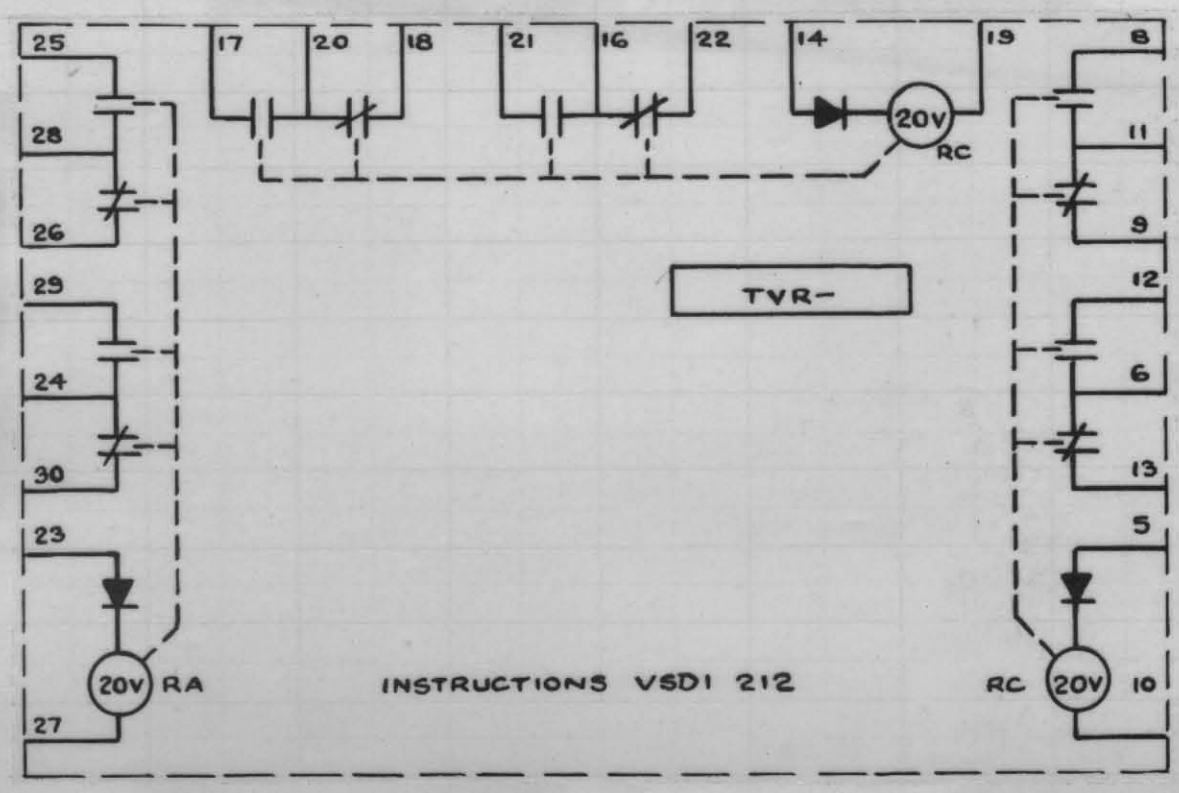


FOR 20V RELAY CONNECTIONS SEE SHEET No. 24

MOUNTED IN RACK 2 POSITIONS 1J & 1K

| TECHN. | ENG. | APPD. | TECHN. | ENG. | APPD. | DATE 27-2-78 | | | |
|---|---|---|---|---|---|---|---|---|---|
| | | | 2 | | | TECHN. RKW | ALLENWEST Simplex | FUNCTIONAL BLOCK DIAGRAM OF 20V. RELAY 60 TON TURRET PUNCH PRESS SCOTTISH MACHINE TOOL CORP. | IDENT |
| | | | | | | ENG. FRS | VARIABLE SPEED DRIVES OPERATION, BRIGHTON, ENGLAND. | | DR / SH |
| | | | | | | APPD. | | GO NUMBER 722N08 / ELEMENTARY DIAGRAM 902M102XD / CONTD. FL | 41 |

DR SH 41 CONTD. FL ELEMENTARY DIAGRAM 902M102XD