VOLTAGE POLARIES SHOWN ARE FOR MOTORING DA1(+)

HARDWARE ABBREVIATIONS

MCC	MAIN CONTROL CARD
IFC	INTERFACE CARD
PSC	POWER SUPPLY CARD
SCR	THYRISTOR ASSEMBLY
DGC	DIAGNOSTIC CARD
MFC	MOTOR FIELD CONTROL
MFE	MOTOR FIELD EXCITER
MDR	MODIFICATION RACK
ACC	AUXILIARY CONTROL CARD

SYMBOLS

AMPLIFIERS

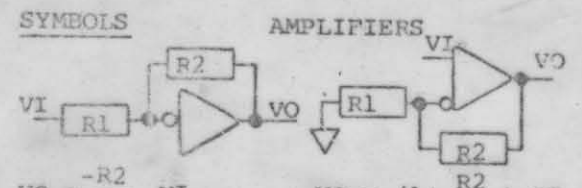

$VO = \frac{-R2}{R1} VI$ $\qquad$ $VO = (1 + \frac{R2}{R1}) VI$

CASE GROUND

VI ( ) ABS VO — VO = SIGN () X ABSOLUTE VALUE OF VI

STAB ON TERMINAL

TERMINAL AT 2TB, 3TB, 4TB, RTB.
EX: 9 [2] - 2TB9; X2 [R] - RTBX2

TERMINAL AT T.B.'s

POTENTIOMETER ARROWS ON THE CARD ELEMENTARY DIAGRAMS INDICATE THE WIPER DIRECTION AS THE POTENTIOMETER SHAFT IS ROTATED CLOCKWISE TO INCREASE FUNCTION.

▲ THESE RESISTORS ARE CRIMPED IN WIRE HARNESS.

FUNCTION	USE	LOC	JUMPERS
60HZ		MFC	ZA-ZB (IF USED)
50HZ	✓	MCC	HZA - PHA
IOC-400%	✓		(NONE)
-500%		IFC	I - IHI
-300%		IFC	I-ILO
SR5 - 9v	✓		NONE)
9 - 20v		MCC	SRH - COM
JOGR 10v			(NONE)
20V		MCC	JH - COM
LT.3-7sec.	✓		(NONE)
2 - 60sec			332Ω FROM LTI TO COM
VREG			NT-CEMF CC-COM
DC TACHO	✓		(NONE)
AC TACHO		MCC	AT1 - AT2
TACHO FILT		IFC	TC - TC
TACHO V. 24-64vdc		IFC	NT-NT1 PT - PT1
27-71vac		IFC	NT-NT1 PT - PT1
60-160vdc	✓	IFC	NT-NT2 PT - PT2
66-177vac		IFC	NT-NT2 PT - PT2
110-300vdc		IFC	NT-NT3 PT - PT3
120-300vac		IFC	NT-NT3 PT - PT3
G134 G256		IFC	MFC OR MFE
MAX AMPS .8 1.7		MF	NONE
1.3 2.8		MF	YB - YD
2.4 5.0	✓	MF	YA - YB
4.0 8.0		MF	YA-YB, YC-YD
7.0 13		MF	YA - YC
13 25		MF	YA-YC, YB-YD
L/R < .25S		MFC	QA - QB
INH RUN		DGC	D1-D2 (IF USED)
INH DRV CL		MCC	DC1 - COM
FUSELESS		ACC	CFY - CFX

SIGNAL DEFINITIONS AND LOCATIONS

*	CEMF	COUNTER EMF (1C16)
*	CFB	CURRENT FEEDBACK (1C16)
	CMFA	ABSOLUTE VALUE CEMF (1C08)
	CRM	CROSSOVER MODIFY (1D11)
	DFP	DELAYED FIRING POWER (1C25)
*	DR	DRIVER REFERENCE (1C33)
*	EAO	ERROR AMP OUTPUT (1C33)
	EST	EXTERNAL FLT STOP INPUT (1C14)
	FALT	FAULT (1C14)
*	FC.	FIELD CURRENT (NS26)
	FDR	FIELD DIAGNOSTIC REFERENCE (1D08)
	FEA	FIELD ECONOMY ADJUST (1C25)
	FF	FIELD FAULT (1B33)
	IABS	MOTOR CURRENT ABSOLUTE (1C09)
	ILA	CURRENT LIMIT ADJUST (1C23)
	IMET	CURRENT SIGNAL FOR METER (1C10)
*	IPU	INITIAL PULSE (1C20)
*	LR	LOCAL REF. FROM DGC (1C33)
*	JOG	JOG SWITCH INPUT (1C23)
*	JOGR	JOG REFERENCE INPUT (1C31)
*	MAC	MAX/MA CONTROL SIGNAL (1C20)
	MSW	MODE SWITCH (1C30)
*	OSC	OSCILLATOR (1C17)
*	PCR	PHASE CONTROL REF. (1C26)
*	PRE	DRIVE PRECONDITION (1C21)
	ØSEQ	PHASE SEQUENCE (1C14)
	RERR	REGULATOR ERROR (1C27)
	RIJ	INTEGRATOR SUMMING JUNCTION (1C27)
	RJ	REGULATOR SUMMING JUNCTION (1C31)
	RRA	REGULATOR RESPONSE ADJUST (1C30)
	RSET	RESET (1C16)
*	RTR	READY TO RUN (1C16)
*	RUN	RUN SWITCH INPUT (1C21)
*	SA-C	PHASE SYN OUTPUT (1C16)
*	SFB	SPEED FEEDBACK (1C20)
	SMET	SPEED SIGNAL FOR METER (1C12)
*	SR	SYSTEM REFERENCE INPUT (1C29)
*	SYS	SYSTEM FAULT TRIP (1C13)
*	TA	OUTPUT FOR TACHO TRIP ADJUST (1C20)
	TF	TACHO FAULT (NS28)
*	TFB	TACHOMETER FEEDBACK (1C20)
	TFR	AC TACHO FREQUENCY OUTPUT (1C13)
*	TR	TIMED REFERENCE (1C33)
*	VFB	VOLTAGE FEEDBACK (1C19)
*	WFR	WEAK FIELD REFERENCE (1C20)

(* - TEST POINT ON DOOR FRONT)

MAPPING SYSTEM

(NS/PS/TS) PS - PAST SHEET
NS - NEXT SHEET
TS - THIS SHEET

HENCE (PS - 12) DENOTES LOCATION ON PAST SHEET LINE 12. OTHER LOCATIONS ARE DENOTED BY SHEET NUMBER AND LINE? E.G. (1A16) SIGNIFIES LOCATION ON SHEET 1A, LINE 16 ETC.

NOTE: FIELD EFFECT TRANSISTOR: THE CLOSED/OPEN (I/O) STATE OF THESE SWITCHED FOR "PRECONDITION" - "RUN" OR JOG" - "DIAGNOSTIC STATIC" - "DIAGNOSTIC RUN" IS SHOWN BY A FOUR DIGIT WORD WITH STATE SEQUENCE.

SEE ALSO DIAGRAM 906P118CD

DR 1 SH A CONTD. 1B ELEMENTARY DIAGRAM 902M122YY

TECHN.	ENG.	APPD.	TECHN.	ENG.	APPD.	DATE 27.7.81
						TECHN.
						ENG.
						APPD.

ALLENWEST Simplex VARIABLE SPEED DRIVES OPERATION, BRIGHTON, ENGLAND.

BDC 3064R 50HP

NOBLE & LUND LTD

GO NUMBER	ELEMENTARY DIAGRAM	CONTD	DR	SH
121N09	902M122YY	1B	1	A

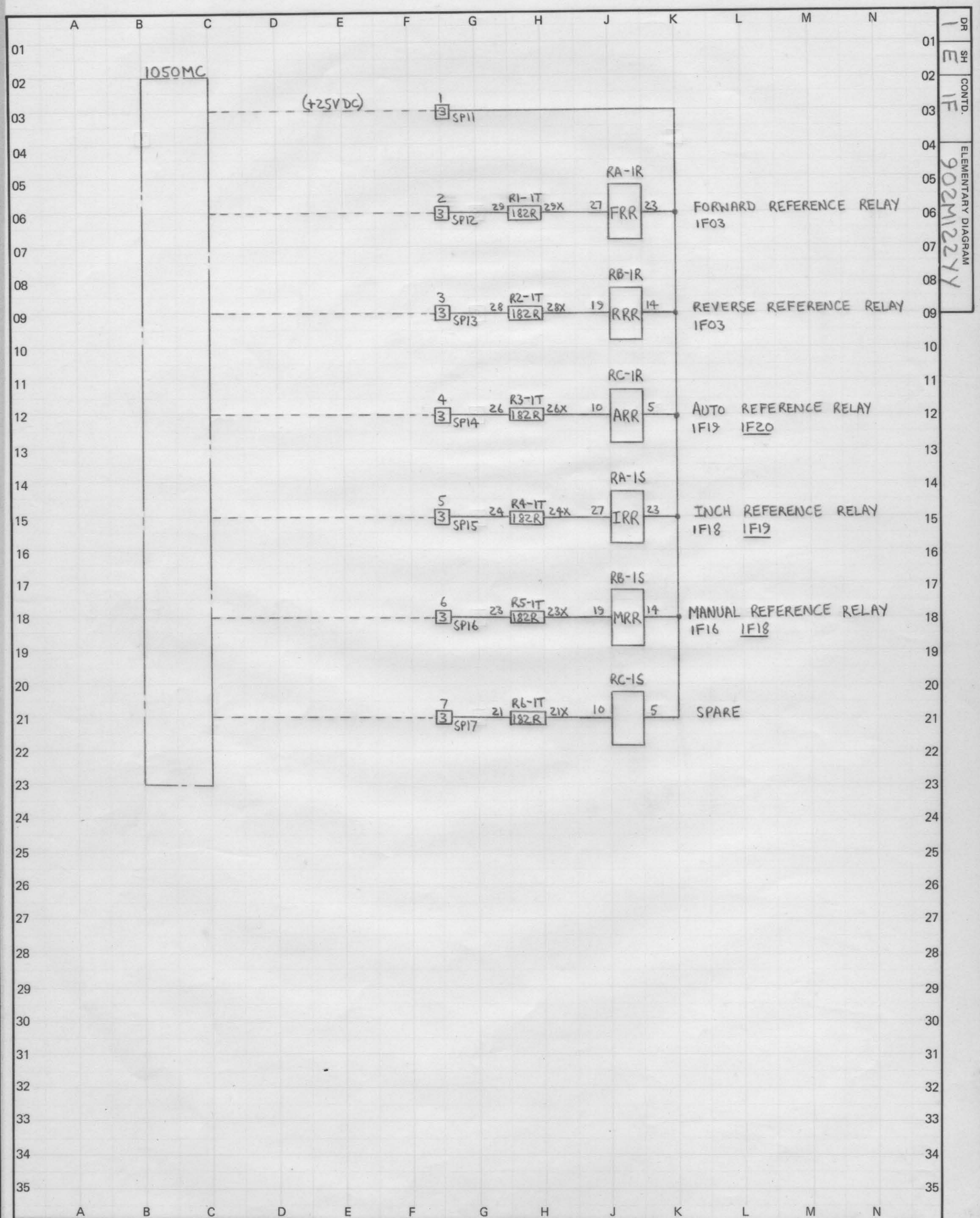

DR 1 SH E CONTD. 1F ELEMENTARY DIAGRAM 902M122YY

TECHN.	ENG.	APPD.	TECHN.	ENG.	APPD.	DATE 22-7-81
						TECHN.
						ENG.
						APPD.

ALLENWEST Simplex GE
VARIABLE SPEED DRIVES OPERATION, BRIGHTON, ENGLAND.

BDC 3064R 50HP

NOBLE & LUND LTD

GO NUMBER	ELEMENTARY DIAGRAM	CONTD.
121N09	902M122YY	1F

IDENT DR 1 SH E

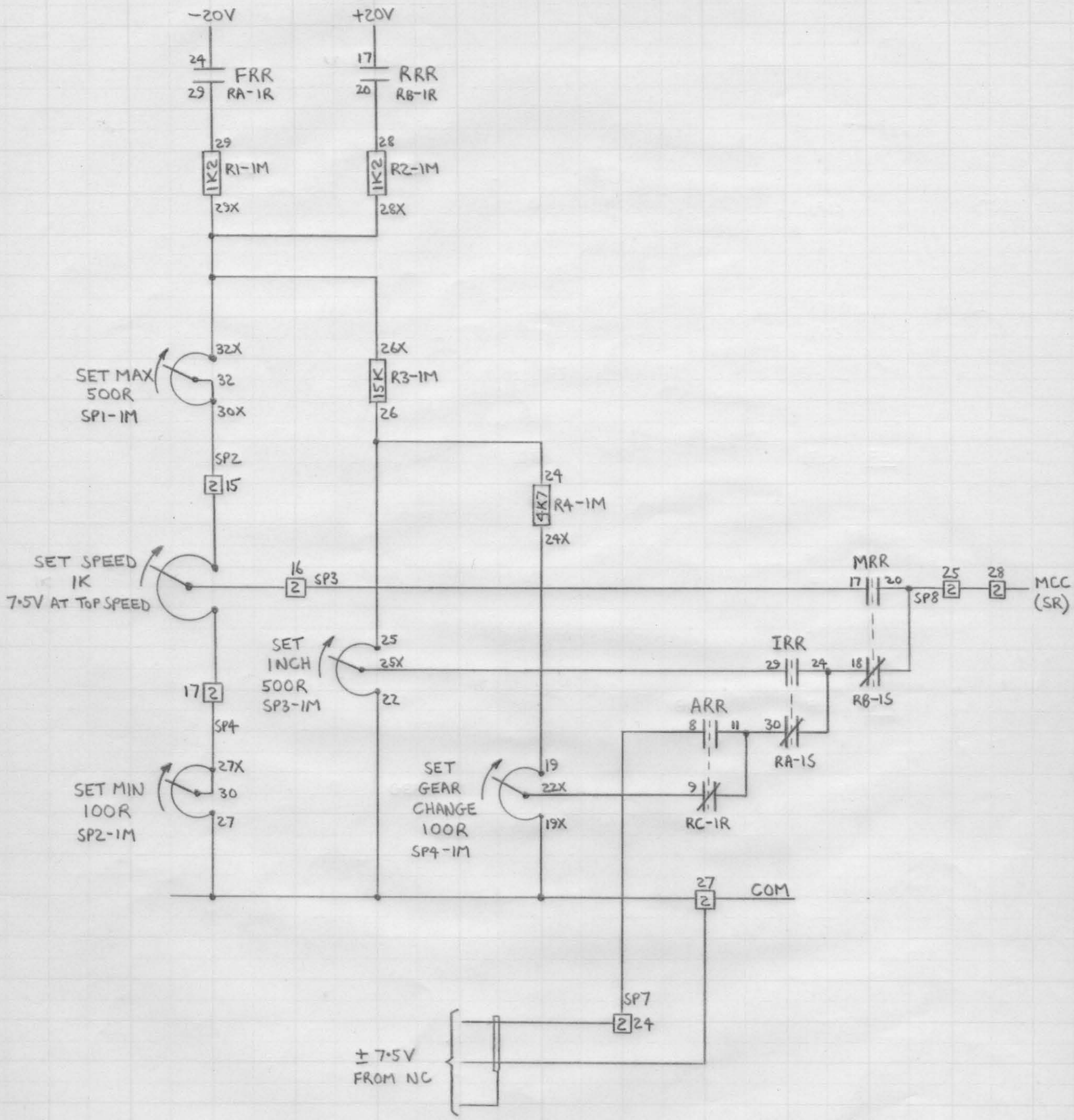

TECHN.	ENG.	APPD.	TECHN.	ENG.	APPD.	DATE 27.7.81
						TECHN.
						ENG.
						APPD.

ALLENWEST
Simplex
VARIABLE SPEED DRIVES OPERATION, BRIGHTON, ENGLAND.

BDC 3064R 50HP

NOBLE & LUND LTD

GO NUMBER	ELEMENTARY DIAGRAM	CONTD.	DR	SH
121N09	902M122YY	1G	1	F

IDENT

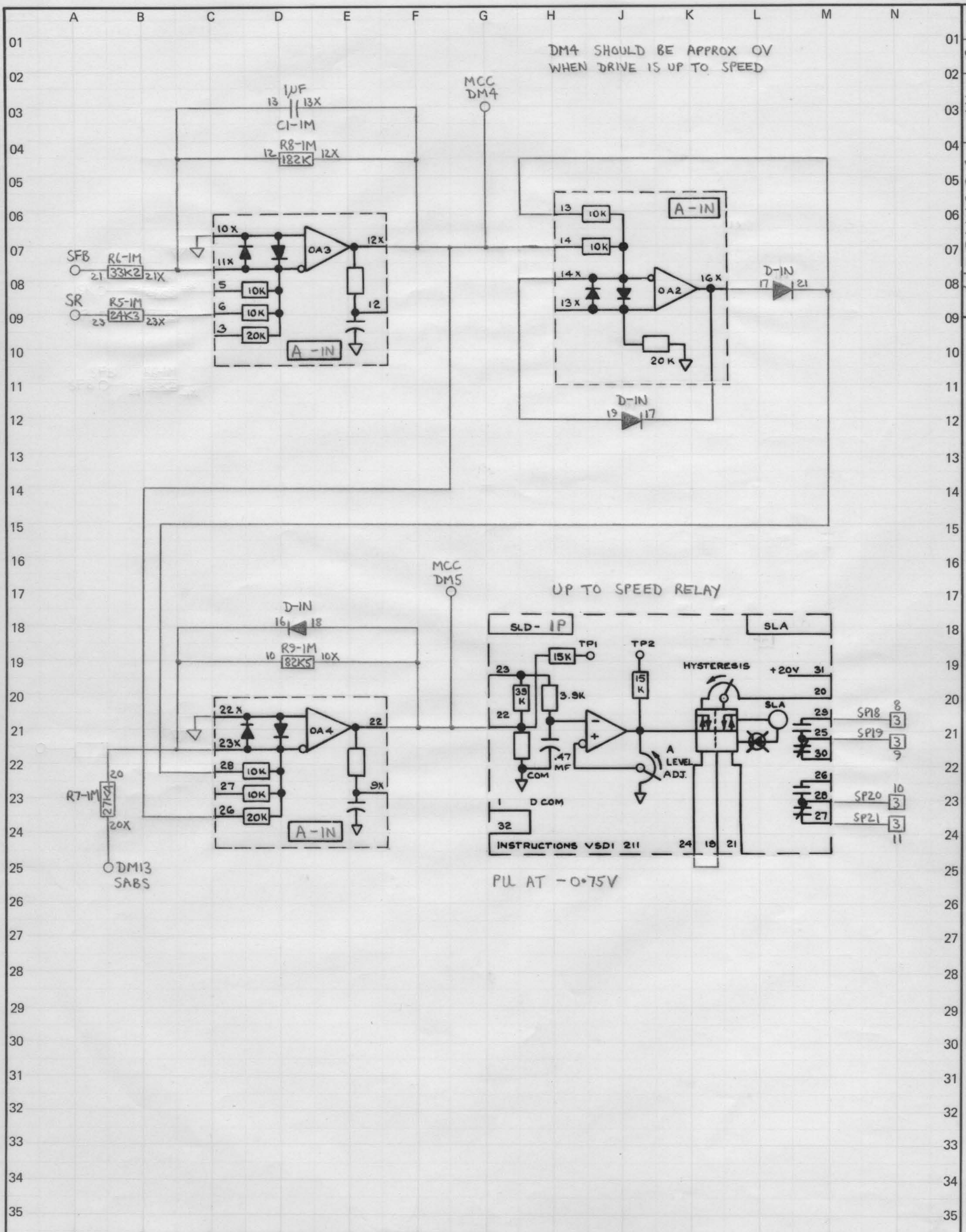

TECHN.	ENG.	APPD.	TECHN.	ENG.	APPD.	DATE 27.7.81	ALLENWEST Simplex	BDC 3064R 50HP	IDENT
			2	D-IN 19 WAS LINKED TO A-IN 14		TECHN.	VARIABLE SPEED DRIVES OPERATION, BRIGHTON, ENGLAND.	NOBLE & LUND LTD	DR 1 / SH G
						ENG.		GO NUMBER 121N09 / ELEMENTARY DIAGRAM 902M122YY / CONTD. 1H	
						APPD.			

DR 1 SH G CONTD. 1H ELEMENTARY DIAGRAM 902M122YY

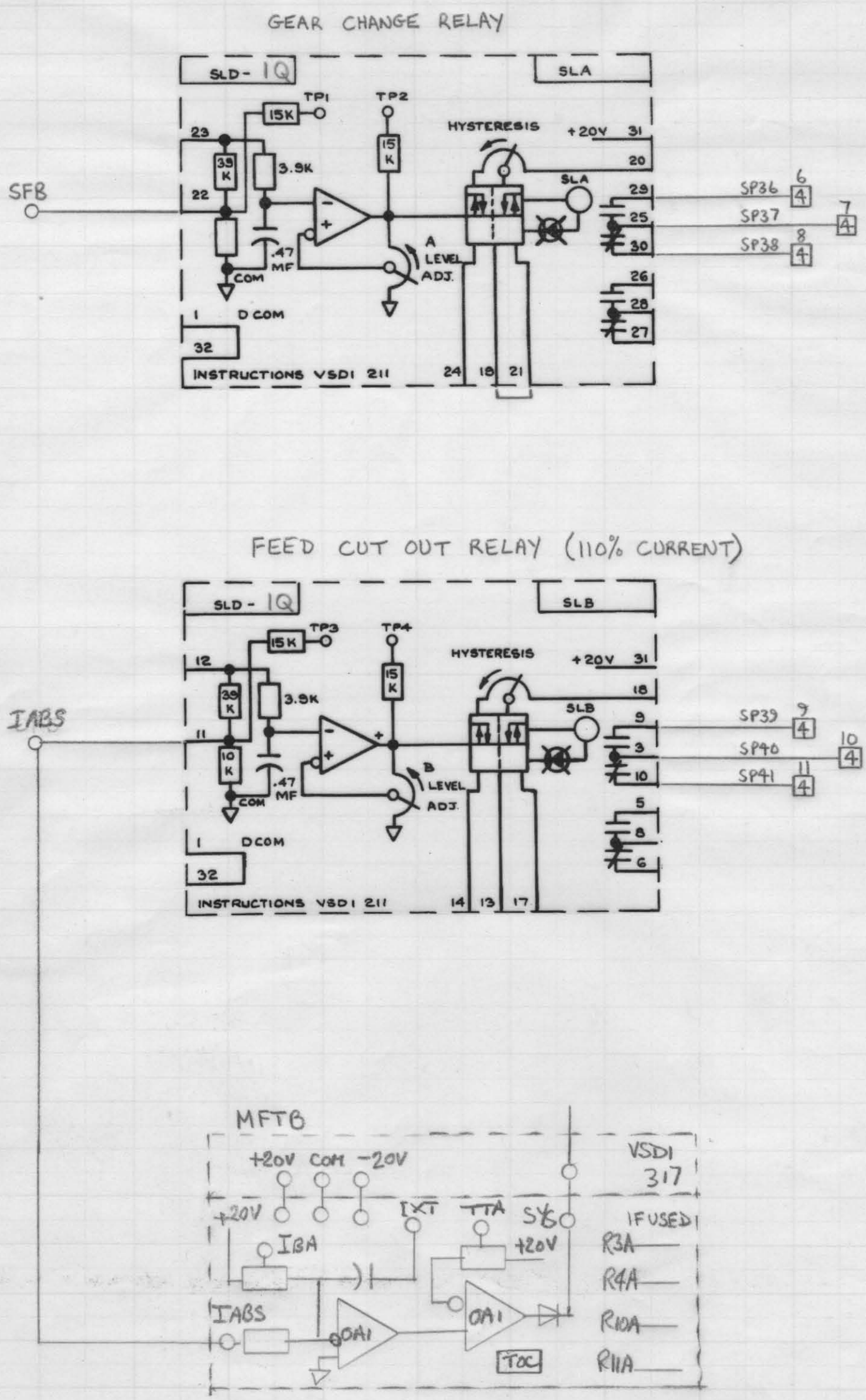

DR	SH	CONTD.	ELEMENTARY DIAGRAM
1	H	1J	902M122YY

TECHN.	ENG.	APPD.	TECHN.	ENG.	APPD.	DATE 22.7.84
			2	1/2 ADDED		TECHN.
						ENG.
						APPD.

ALLENWEST
Simplex
VARIABLE SPEED DRIVES OPERATION, BRIGHTON, ENGLAND.

BDC 3064R 50HP

NOBLE & LUND LTD

GO NUMBER	ELEMENTARY DIAGRAM	CONTD.	IDENT DR	IDENT SH
121N09	902M122YY	1J	1	H

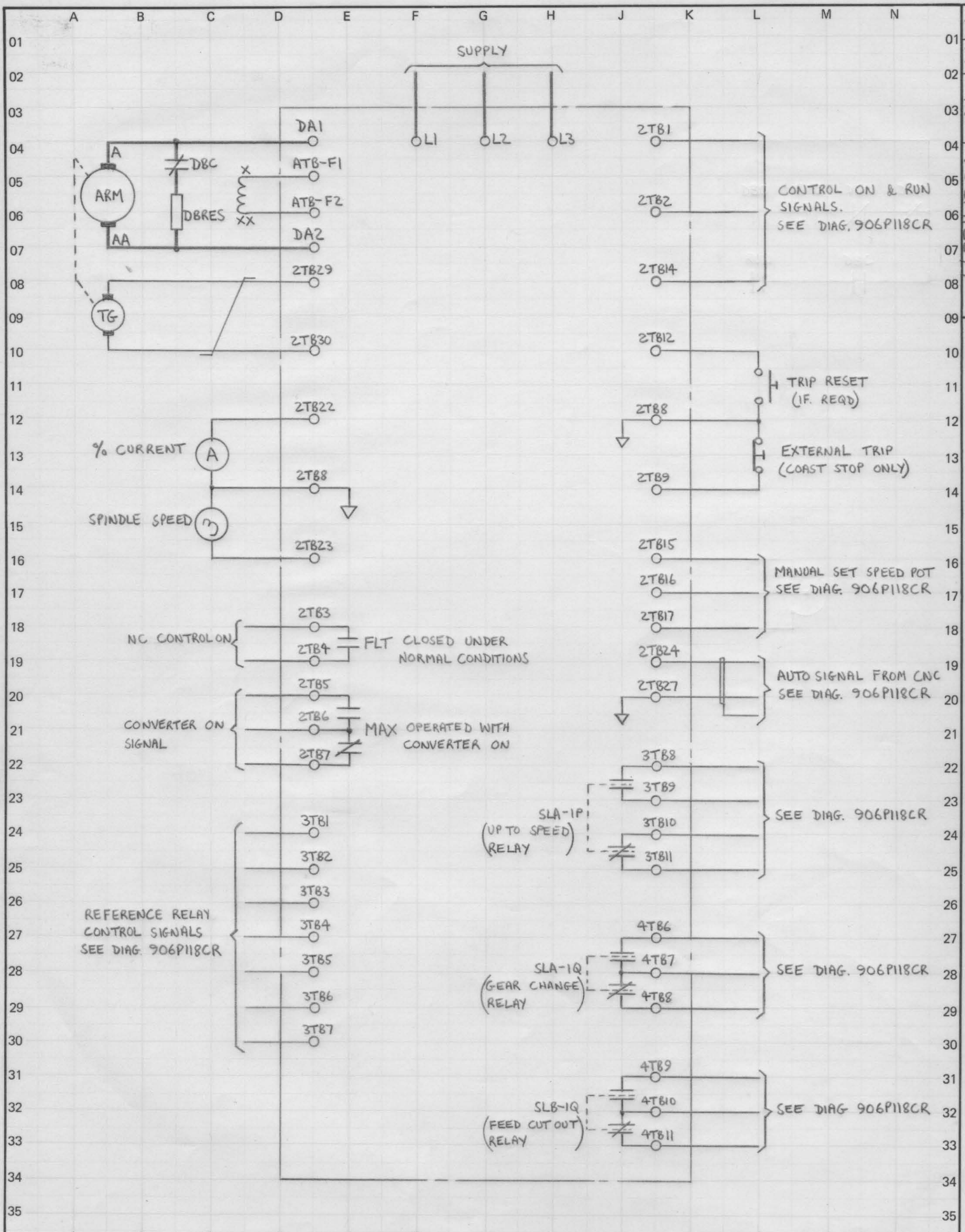

DR	SH	CONTD.	ELEMENTARY DIAGRAM
1	M	IN	902M122YY

TECHN.	ENG.	APPD.	TECHN.	ENG.	APPD.	DATE 27.1.81
						TECHN.
						ENG.
						APPD.

ALLENWEST
Simplex
VARIABLE SPEED DRIVES OPERATION, BRIGHTON, ENGLAND.

BDC 3064R 50HP

NOBLE & LUND LTD

GO NUMBER	ELEMENTARY DIAGRAM	CONTD.	DR	SH
121N09	902M122YY	IN	1	M

IDENT