VOLTAGE POLARIES SHOWN ARE FOR MOTORING DA1(+)

HARDWARE ABBREVIATIONS

MCC	MAIN CONTROL CARD
IFC	INTERFACE CARD
PSC	POWER SUPPLY CARD
SCR	THYRISTOR ASSEMBLY
DGC	DIAGNOSTIC CARD
MFC	MOTOR FIELD CONTROL
MFE	MOTOR FIELD EXCITER
MDR	MODIFICATION RACK
ACC	AUXILIARY CONTROL CARD

SYMBOLS

AMPLIFIERS

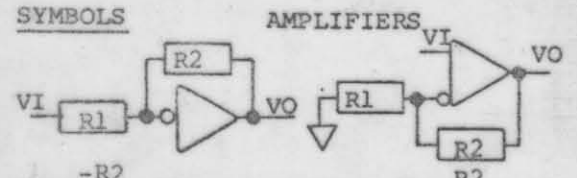

$VO = \frac{-R2}{R1} VI$ $\qquad$ $VO = (1 + \frac{R2}{R1}) VI$

CASE GROUND

VI ( ) Abs VO — VO = SIGN () X ABSOLUTE VALUE OF VI

STAB ON TERMINAL

TERMINAL AT 2TB, 3TB, 4TB, RTB.
EX: 9 [2] - 2TB9; X2 [R] - RTBX2

TERMINAL AT T.B.'s

POTENTIOMETER ARROWS ON THE CARD ELEMENTARY DIAGRAMS INDICATE THE WIPER DIRECTION AS THE POTENTIOMETER SHAFT IS ROTATED CLOCKWISE TO INCREASE FUNCTION.

THESE RESISTORS ARE CRIMPED IN WIRE HARNESS.

FUNCTION	USE	LOC	JUMPERS
60HZ	X	MFC	ZA-ZB (IF USED)
50HZ		MCC	HZA - PHA
IOC-400%	X		(NONE)
-500%		IFC	I - IHI
-300%		IFC	I-ILO
SR5 - 9v			NONE)
9 - 20v	X	MCC	SRH - COM
JOGR 10v			(NONE)
20V		MCC	JH - COM
LT.3-7sec.			(NONE)
2 - 60sec	X		332Ω FROM LTI TO COM
VREG			NT-CEMF CC-COM
DC TACHO			(NONE)
AC TACHO	X	MCC	AT1 - AT2
TACHO FILT		IFC	TC - TC
TACHO V. 24-64vdc		IFC	NT-NT1 PT - PT1
27-71vac		IFC	NT-NT1 PT - PT1
60-160vdc		IFC	NT-NT2 PT - PT2
66-177vac	X	IFC	NT-NT2 PT - PT2
110-300vdc		IFC	NT-NT3 PT - PT3
120-300vac		IFC	NT-NT3 PT - PT3
G134 G256		IFC	MFC OR MFE
MAX AMPS .8 1.7		MF	NONE
1.3 2.8		MF	YB - YD
2.4 5.0		MF	YA - YB
4.0 8.0	X	MF	YA-YB, YC-YD
7.0 13		MF	YA - YC
13 25		MF	~~YA-YC, YB-YD~~
L/R < .25S		MFC	QA - QB
INH RUN		DGC	D1-D2 (IF USED)
INH DRV CL		MCC	DC1 - COM
FUSELESS		ACC	CFY - CFX
125% DRIV C/L		MCC	DCX-DCY

SIGNAL DEFINITIONS AND LOCATIONS

*	CEMF	COUNTER EMF (3 16)
*	CFB	CURRENT FEEDBACK (3 16)
	CMFA	ABSOLUTE VALUE CEMF (3 08)
	CRM	CROSSOVER MODIFY (3 11)
	DFP	DELAYED FIRING POWER (3 25)
*	DR	DRIVER REFERENCE (3 33)
*	EAO	ERROR AMP OUTPUT (3 33)
	EST	EXTERNAL FLT STOP INPUT (3 14)
	FALT	FAULT (3 14)
*	FC	FIELD CURRENT (NS26)
	FDR	FIELD DIAGNOSTIC REFERENCE (4 08)
	FEA	FIELD ECONOMY ADJUST (3 25)
	FF	FIELD FAULT (3 28)
	IABS	MOTOR CURRENT ABSOLUTE (3 09)
	ILA	CURRENT LIMIT ADJUST (3 23)
	IMET	CURRENT SIGNAL FOR METER (3 10)
*	IPU	INITIAL PULSE (3 20)
*	LR	LOCAL REF. FROM DGC (3 33)
*	JOG	JOG SWITCH INPUT (3 23)
*	JOGR	JOG REFERENCE INPUT (3 31)
*	MAC	MAX/MA CONTROL SIGNAL (3 20)
	MSW	MODE SWITCH (3 30)
*	OSC	OSCILLATOR (3 17)
*	PCR	PHASE CONTROL REF. (3 26)
*	PRE	DRIVE PRECONDITION (3 21)
	ØSEQ	PHASE SEQUENCE (3 14)
	RERR	REGULATOR ERROR (3 27)
	RIJ	INTEGRATOR SUMMING JUNCTION (3 27)
	RJ	REGULATOR SUMMING JUNCTION (3 31)
	RRA	REGULATOR RESPONSE ADJUST (3 30)
	RSET	RESET (3 16)
*	RTR	READY TO RUN (3 16)
*	RUN	RUN SWITCH INPUT (3 21)
*	SA-C	PHASE SYN OUTPUT (3 16)
*	SFB	SPEED FEEDBACK (3 20)
	SMET	SPEED SIGNAL FOR METER (3 12)
*	SR	SYSTEM REFERENCE INPUT (3 29)
*	SYS	SYSTEM FAULT TRIP (3 13)
*	TA	OUTPUT FOR TACHO TRIP ADJUST (3 20)
	TF	TACHO FAULT (NS28)
*	TFB	TACHOMETER FEEDBACK (3 20)
	TFR	AC TACHO FREQUENCY OUTPUT (3 13)
*	TR	TIMED REFERENCE (3 33)
*	VFB	VOLTAGE FEEDBACK (3 19)
*	WFR	WEAK FIELD REFERENCE (3 20)

(* - TEST POINT ON DOOR FRONT)

MAPPING SYSTEM

(NS/PS/TS) PS - PAST SHEET
NS - NEXT SHEET
TS - THIS SHEET

HENCE (PS - 12) DENOTES LOCATION ON PAST SHEET LINE 12. OTHER LOCATIONS ARE DENOTED BY SHEET NUMBER AND LINE? E.G. (1A16) SIGNIFIES LOCATION ON SHEET 1A, LINE 16 ETC.

NOTE: FIELD EFFECT TRANSISTOR: THE CLOSED/OPEN (I/O) STATE OF THESE SWITCHED FOR "PRECONDITION" - "RUN" OR JOG" - "DIAGNOSTIC STATIC" - "DIAGNOSTIC RUN" IS SHOWN BY A. FOUR DIGIT WORD WITH STATE SEQUENCE.

SIMPLIFIED 3064R SCHEMATIC SEE 906P118CD

DR | SH 1 | CONTD. 2 | ELEMENTARY DIAGRAM 902M126XX

TECHN.	ENG.	APPD.	TECHN.	ENG.	APPD.	DATE 27 4 83
			AS SHIPPED 27 7 83			TECHN. / ENG. / APPD.

ALLEN-WEST Simplex VARIABLE SPEED DRIVES OPERATION, BRIGHTON, ENGLAND.

BDC 3064R 100 HP (KEIGHLEY GRINDERS

CO NUMBER	ELEMENTARY DIAGRAM	CONTD.	DR	SH
316N00	902M126XX	2		1

IDENT

Disclaimer Statement The trade mark is the trade mark of General Electric Company of U.S.A., which is not connected with the English Company of a similar name.

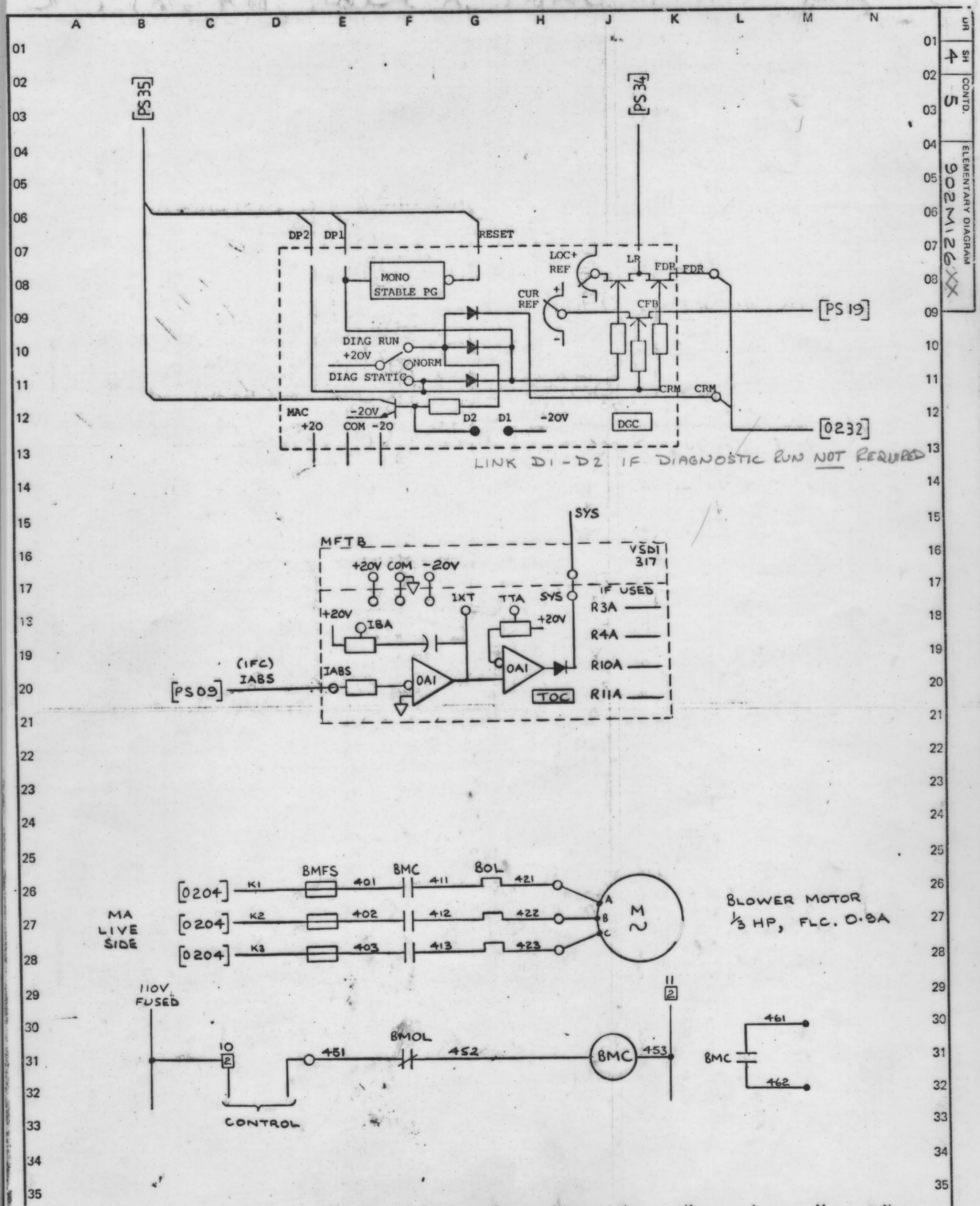

TECHN.	ENG.	APPD.	TECHN.	ENG.	APPD.	DATE 27 4 83
						TECHN.
						ENG.
						APPD.

ALLENWEST Simplex
VARIABLE SPEED DRIVES OPERATION, BRIGHTON, ENGLAND.

BDC 3064R

FOR KEIGHLEY GRINDERS

GO NUMBER	ELEMENTARY DIAGRAM	CONTD.
316N00	902M126XX	5

IDENT DR SH 4

DR SH 4 CONTD. 5 ELEMENTARY DIAGRAM 902M126XX

Disclaimer Statement The trade mark is the trade mark of General Electric Company of U.S.A., which is not connected with the English Company of a similar name.

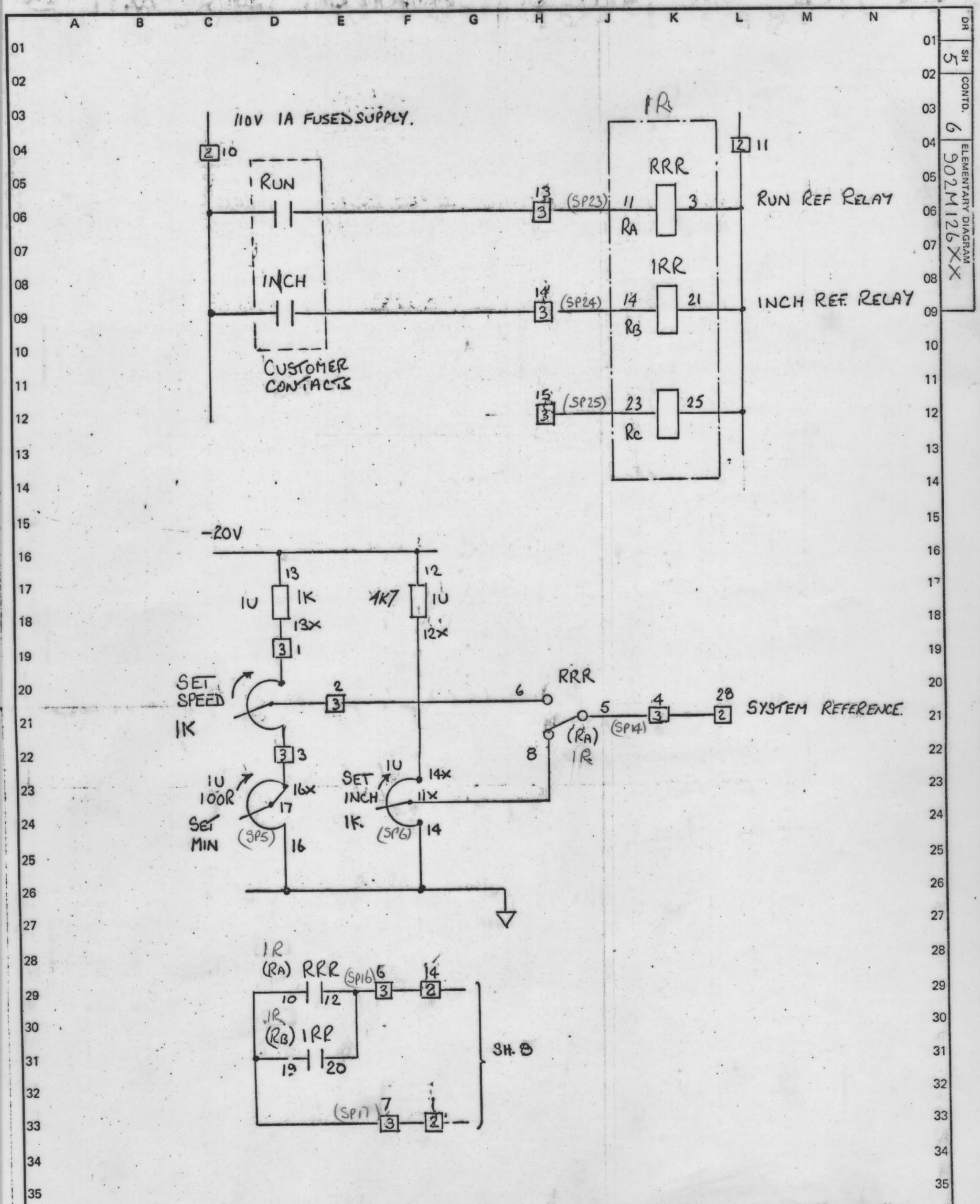

TECHN.	ENG.	APPD.	TECHN.	ENG.	APPD.	DATE 27.4.83
						TECHN.
						ENG.
						APPD.

ALLENWEST Simplex
VARIABLE SPEED DRIVES OPERATION, BRIGHTON, ENGLAND.

BDC 3064R

REFERENCE CIRCUITS

GO NUMBER	ELEMENTARY DIAGRAM	CONTD.	DR	SH
316N00	902M126XX	6		5

IDENT

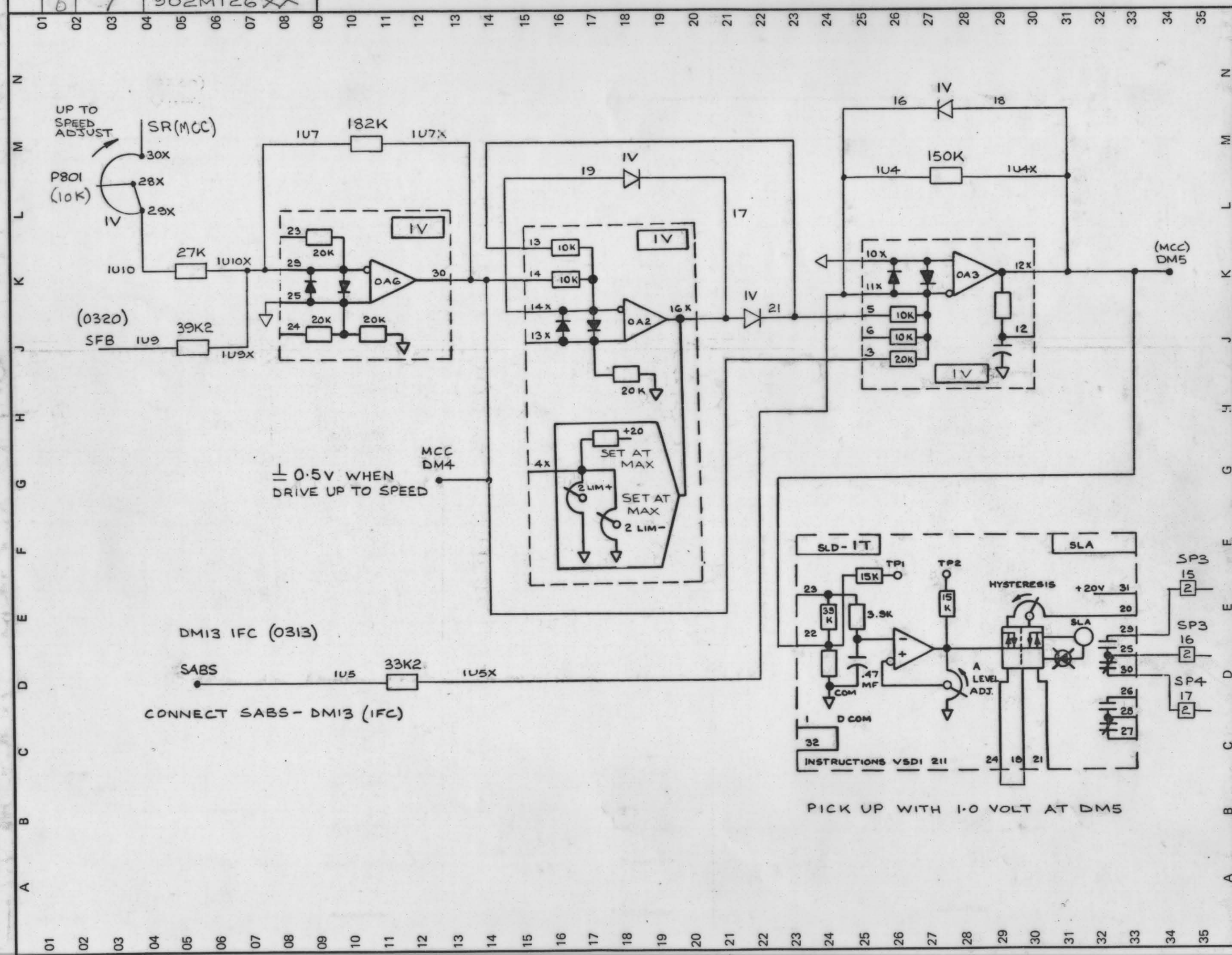

IDENT | DR | SH 6

BDC 3064R
KEIGHLEY GRINDERS
UP TO SPEED CIRCUIT

CONTD. 7

GO NUMBER 316N00 | ELEMENTARY DIAGRAM 902M126XX

ALLENWEST
Simplex
VARIABLE SPEED DRIVES OPERATION, BRIGHTON, ENGLAND.

DATE 27.4.83	TECHN.	ENG.	APPD.
TECHN.	ENG.	APPD.	
TECHN.	ENG.	APPD.	

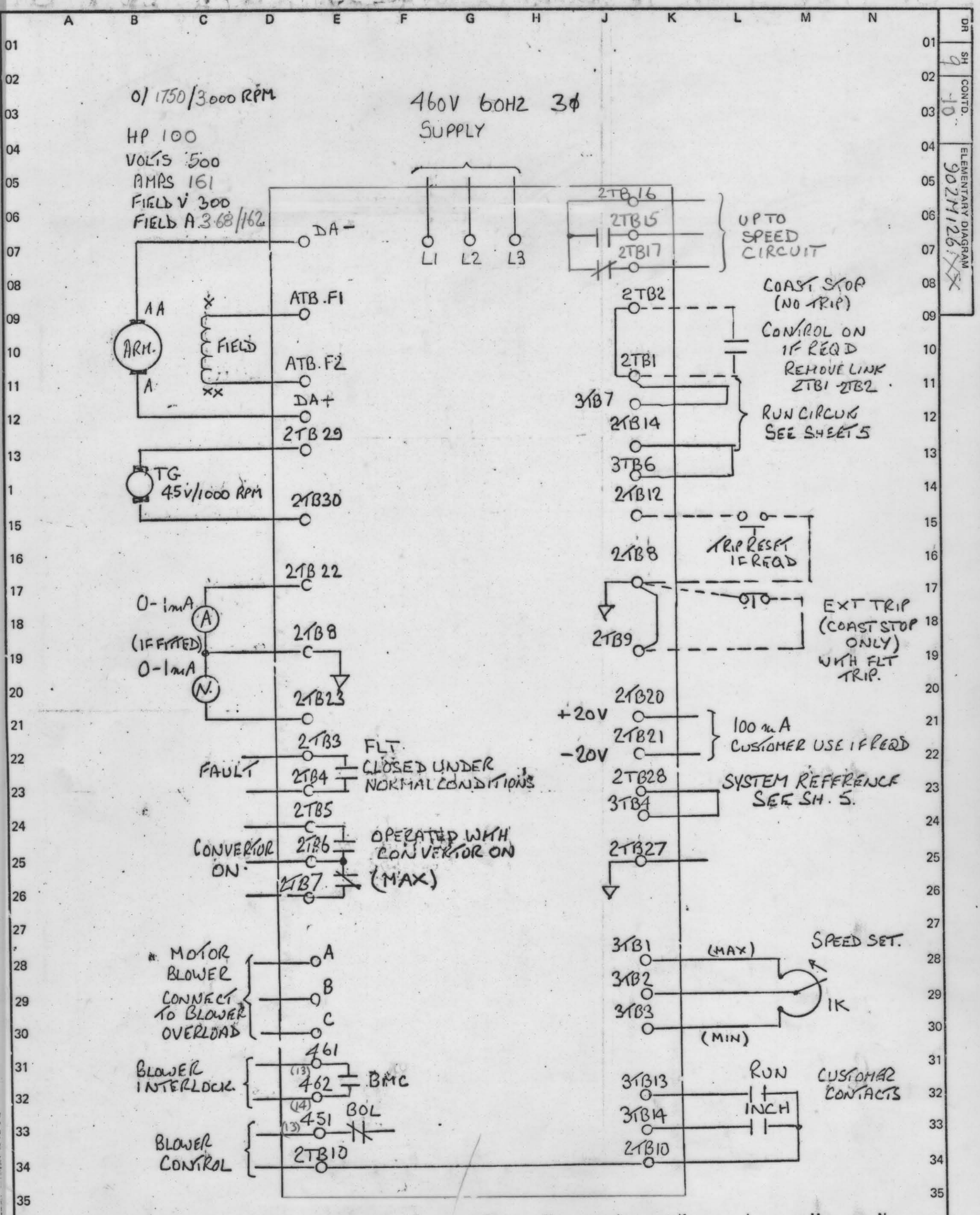

TECHN.	ENG.	APPD.	TECHN.	ENG.	APPD.	DATE 27 4 83
						TECHN.
						ENG.
						APPD.

ALLENWEST
Simplex
VARIABLE SPEED DRIVES OPERATION, BRIGHTON, ENGLAND.

BDC 3064R 25HP
DRIVE EXT CONNECTIONS
(KEIGHLEY GRINDERS

GO NUMBER	ELEMENTARY DIAGRAM	CONTD.
316N00	902M126 XX	10

IDENT

DR	SH
	9

DR | SH 9 | CONTD. 10 | ELEMENTARY DIAGRAM 902M126 XX

VOLTAGE POLARIES SHOWN ARE FOR MOTORING DA1(+)

HARDWARE ABBREVIATIONS

MCC	MAIN CONTROL CARD
IFC	INTERFACE CARD
PSC	POWER SUPPLY CARD
SCR	THYRISTOR ASSEMBLY
DGC	DIAGNOSTIC CARD
MFC	MOTOR FIELD CONTROL
MFE	MOTOR FIELD EXCITER
MDR	MODIFICATION RACK
ACC	AUXILIARY CONTROL CARD

SYMBOLS

AMPLIFIERS

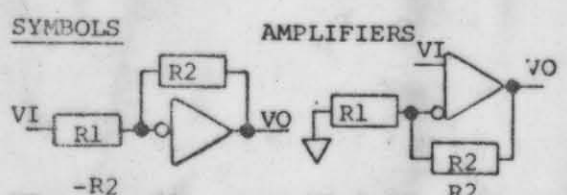

$VO = \frac{-R2}{R1} VI$ $VO = (1 + \frac{R2}{R1}) VI$

CASE GROUND

VI ( ) VO ABS — VO = SIGN () X ABSOLUTE VALUE OF VI

STAB ON TERMINAL

TERMINAL AT 2TB, 3TB, 4TB, RTB.
EX: 9 [2] - 2TB9; X2 [R] - RTBX2

TERMINAL AT T.B.'s

POTENTIOMETER ARROWS ON THE CARD ELEMENTARY DIAGRAMS INDICATE THE WIPER DIRECTION AS THE POTENTIOMETER SHAFT IS ROTATED CLOCKWISE TO INCREASE FUNCTION.

THESE RESISTORS ARE CRIMPED IN WIRE HARNESS.

FUNCTION	USE	LOC	JUMPERS
60HZ		MFC	ZA-ZB (IF USED)
50HZ	X	MCC	HZA - PHA
IOC-400%	X		(NONE)
-500%		IFC	I - IHI
-300%		IFC	I-ILO
SR5 - 9v			NONE)
9 - 20v	X	MCC	SRH - COM
JOGR 10v			(NONE)
20V		MCC	JH - COM
LT.3-7sec.	X		(NONE)
2 - 60sec			332Ω FROM LTI TO COM
VREG			NT-CEMF CC-COM
DC TACHO	X		(NONE)
AC TACHO		MCC	AT1 - AT2
TACHO FILT		IFC	TC - TC
TACHO V.			
24-64vdc		IFC	NT-NT1 PT - PT1
27-71vac		IFC	NT-NT1 PT - PT1
60-160vdc		IFC	NT-NT2 PT - PT2
66-177vac		IFC	NT-NT2 PT - PT2
110-300vdc	X	IFC	NT-NT3 PT - PT3
120-300vac		IFC	NT-NT3 PT - PT3
G134 G256		IFC	MFC OR MFE
MAX AMPS .8 1.7		MF	NONE
1.3 2.8		MF	YB - YD
2.4 5.0		MF	YA - YB
4.0 8.0	X	MF	YA-YB, YC-YD
7.0 13		MF	YA - YC
13 25		MF	YA-YC, YB-YD
L/R < .25S	X	MFC	QA - QB
INH RUN		DGC	D1-D2 (IF USED)
200% DRV CL	X	MCC	DCX - DCY
FUSELESS		ACC	CFY - CFX

SIGNAL DEFINITIONS AND LOCATIONS

*	CEMF	COUNTER EMF (16)
*	CFB	CURRENT FEEDBACK (16)
	CMFA	ABSOLUTE VALUE CEMF (08)
	CRM	CROSSOVER MODIFY (11)
	DFP	DELAYED FIRING POWER (25)
*	DR	DRIVER REFERENCE (33)
*	EAO	ERROR AMP OUTPUT (33)
	EST	EXTERNAL FLT STOP INPUT (14)
	FALT	FAULT (14)
*	FC	FIELD CURRENT (NS26)
	FDR	FIELD DIAGNOSTIC REFERENCE (08)
	FEA	FIELD ECONOMY ADJUST (25)
	FF	FIELD FAULT (28)
	IABS	MOTOR CURRENT ABSOLUTE (09)
	ILA	CURRENT LIMIT ADJUST (23)
	IMET	CURRENT SIGNAL FOR METER (10)
*	IPU	INITIAL PULSE (20)
*	LR	LOCAL REF. FROM DGC (33)
*	JOG	JOG SWITCH INPUT (23)
*	JOGR	JOG REFERENCE INPUT (31)
*	MAC	MAX/MA CONTROL SIGNAL (20)
	MSW	MODE SWITCH (30)
*	OSC	OSCILLATOR (17)
*	PCR	PHASE CONTROL REF. (26)
*	PRE	DRIVE PRECONDITION (21)
	ØSEQ	PHASE SEQUENCE (14)
	RERR	REGULATOR ERROR (27)
	RIJ	INTEGRATOR SUMMING JUNCTION (27)
	RJ	REGULATOR SUMMING JUNCTION (31)
	RRA	REGULATOR RESPONSE ADJUST (30)
	RSET	RESET (16)
*	RTR	READY TO RUN (16)
*	RUN	RUN SWITCH INPUT (21)
*	SA-C	PHASE SYN OUTPUT (16)
*	SFB	SPEED FEEDBACK (20)
	SMET	SPEED SIGNAL FOR METER (12)
*	SR	SYSTEM REFERENCE INPUT (29)
*	SYS	SYSTEM FAULT TRIP (13)
*	TA	OUTPUT FOR TACHO TRIP ADJUST (20)
	TF	TACHO FAULT (NS28)
*	TFB	TACHOMETER FEEDBACK (20)
	TFR	AC TACHO FREQUENCY OUTPUT (13)
*	TR	TIMED REFERENCE (33)
*	VFB	VOLTAGE FEEDBACK (19)
*	WFR	WEAK FIELD REFERENCE (20)

(* - TEST POINT ON DOOR FRONT)

MAPPING SYSTEM

(NS/PS/TS) PS - PAST SHEET
NS - NEXT SHEET
TS - THIS SHEET

HENCE (PS - 12) DENOTES LOCATION ON PAST SHEET LINE 12. OTHER LOCATIONS ARE DENOTED BY SHEET NUMBER AND LINE? E.G. (1A16) SIGNIFIES LOCATION ON SHEET 1A, LINE 16 ETC.

NOTE: FIELD EFFECT TRANSISTOR: THE CLOSED/OPEN (I/O) STATE OF THESE SWITCHED FOR "PRECONDITION" - "RUN" OR JOG" - "DIAGNOSTIC STATIC" - "DIAGNOSTIC RUN" IS SHOWN BY A FOUR DIGIT WORD WITH STATE SEQUENCE.

FOR SIMPLIFIED STD. THYRISTOR DRIVE SCHEMATIC DIA.
SEE 906P118CD

TECHN.	ENG.	APPD.	TECHN.	ENG.	APPD.	DATE
				NGM		17/3/83

2 AS SHIPPED 25/5/83

TECHN. ENG. NGM APPD.

ALLEN-WEST Simplex VARIABLE SPEED DRIVES OPERATION, BRIGHTON, ENGLAND

BDC 3064R 50HP

KEIGHLEY GRINDERS

GO NUMBER	ELEMENTARY DIAGRAM	CONTD.
310N01	902M126XD	2

IDENT DR SH 1

Disclaimer Statement The trade mark is the trade mark of General Electric Company of U.S.A., which is not connected with the English Company of a similar name.

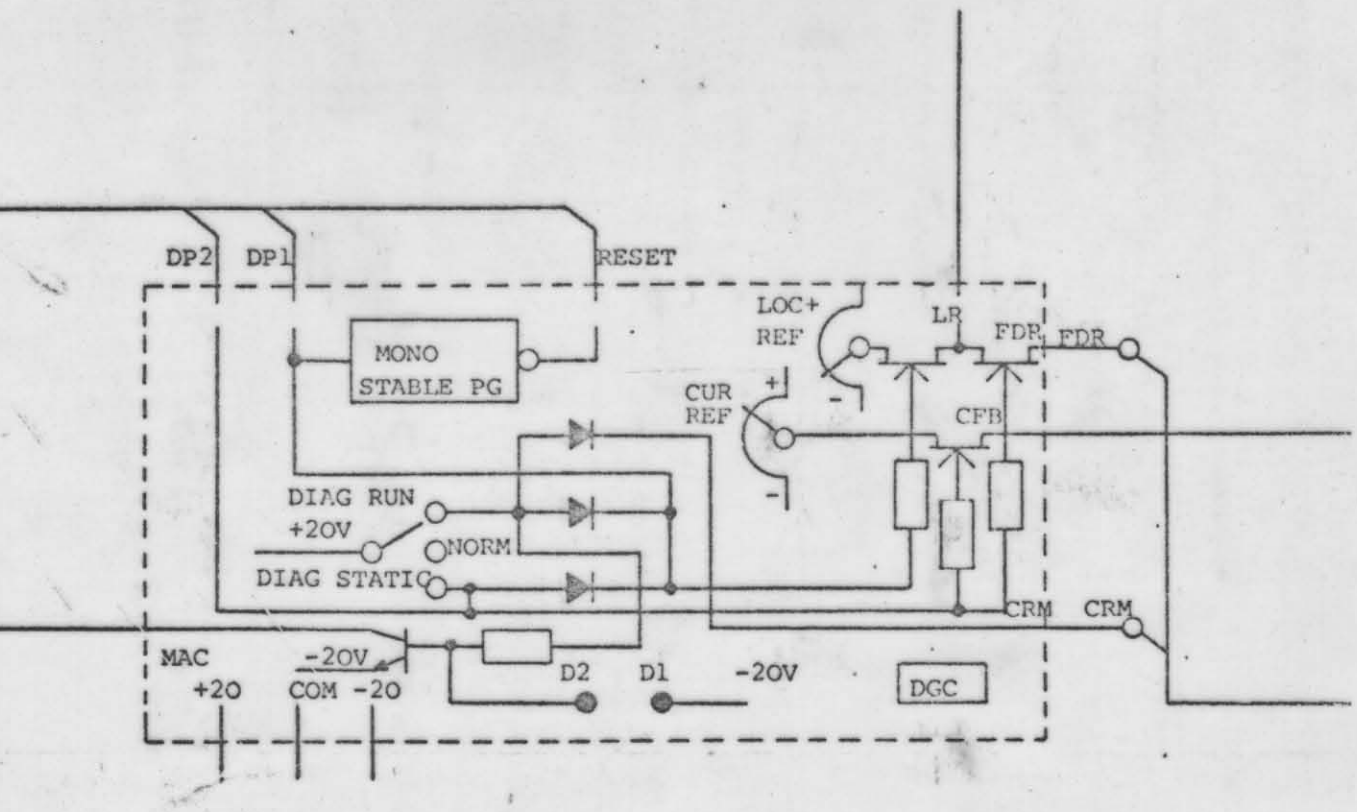

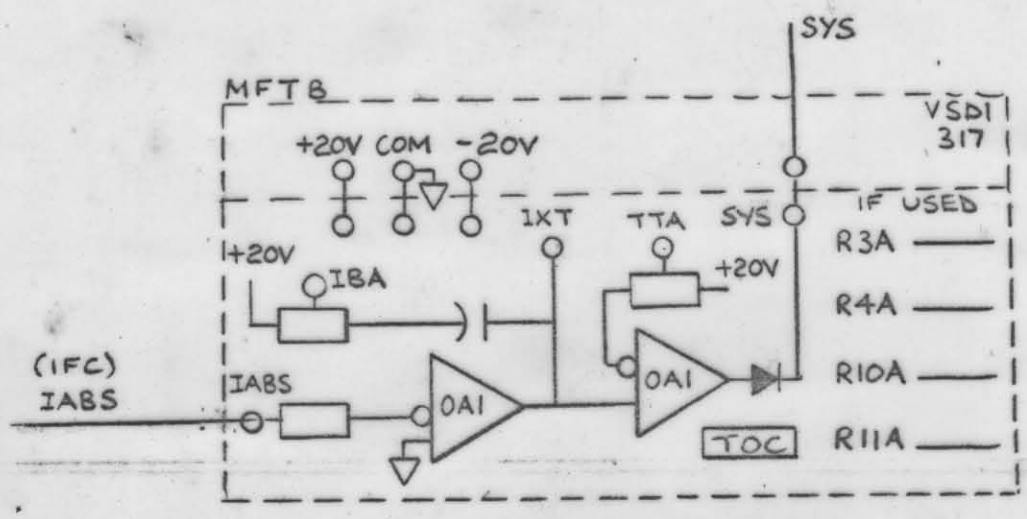

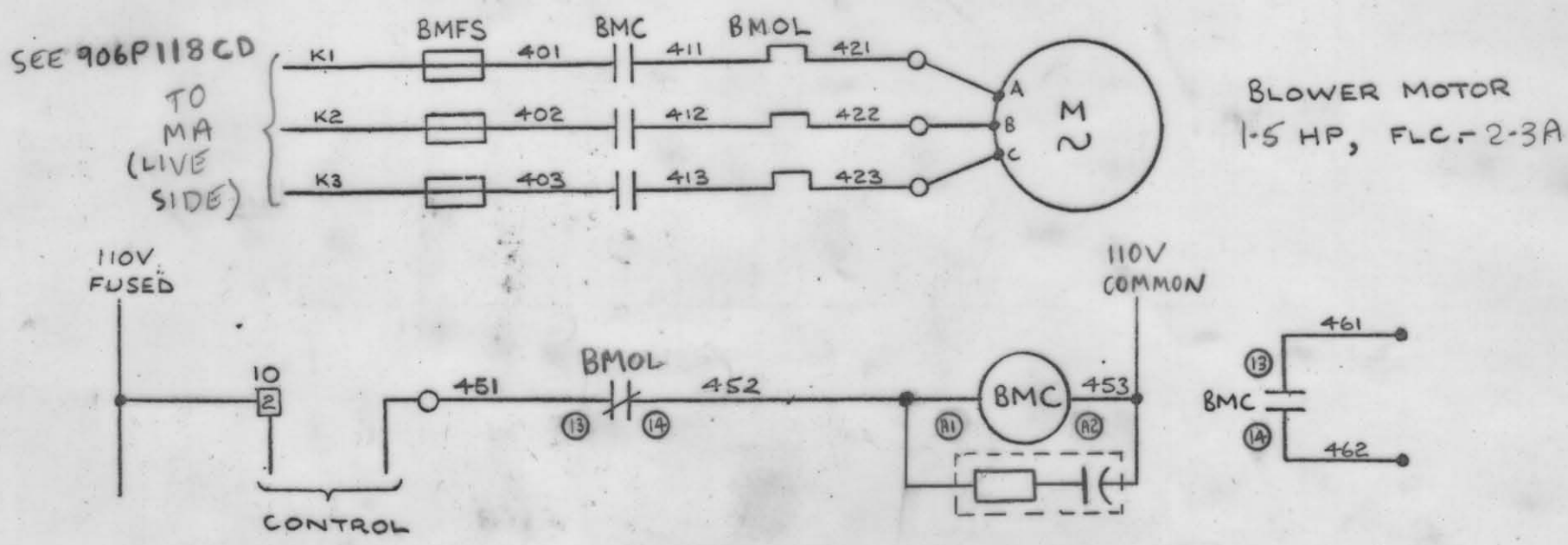

TECHN.	ENG.	APPD.	TECHN.	ENG.	APPD.	DATE
			2	NGM 25/5/83		17/3/83

TECHN
ENG. NGM
APPD.

ALLENWEST Simplex
VARIABLE SPEED DRIVES OPERATION, BRIGHTON, ENGLAND.

BDC 3064R 50HP

FOR KEIGHLEY GRINDERS

GO NUMBER	ELEMENTARY DIAGRAM	CONTD.
310N01	902M126XD	3

IDENT

DR	SH
	2

Disclaimer Statement The trade mark is the trade mark of General Electric Company of U.S.A., which is not connected with the English Company of a similar name.

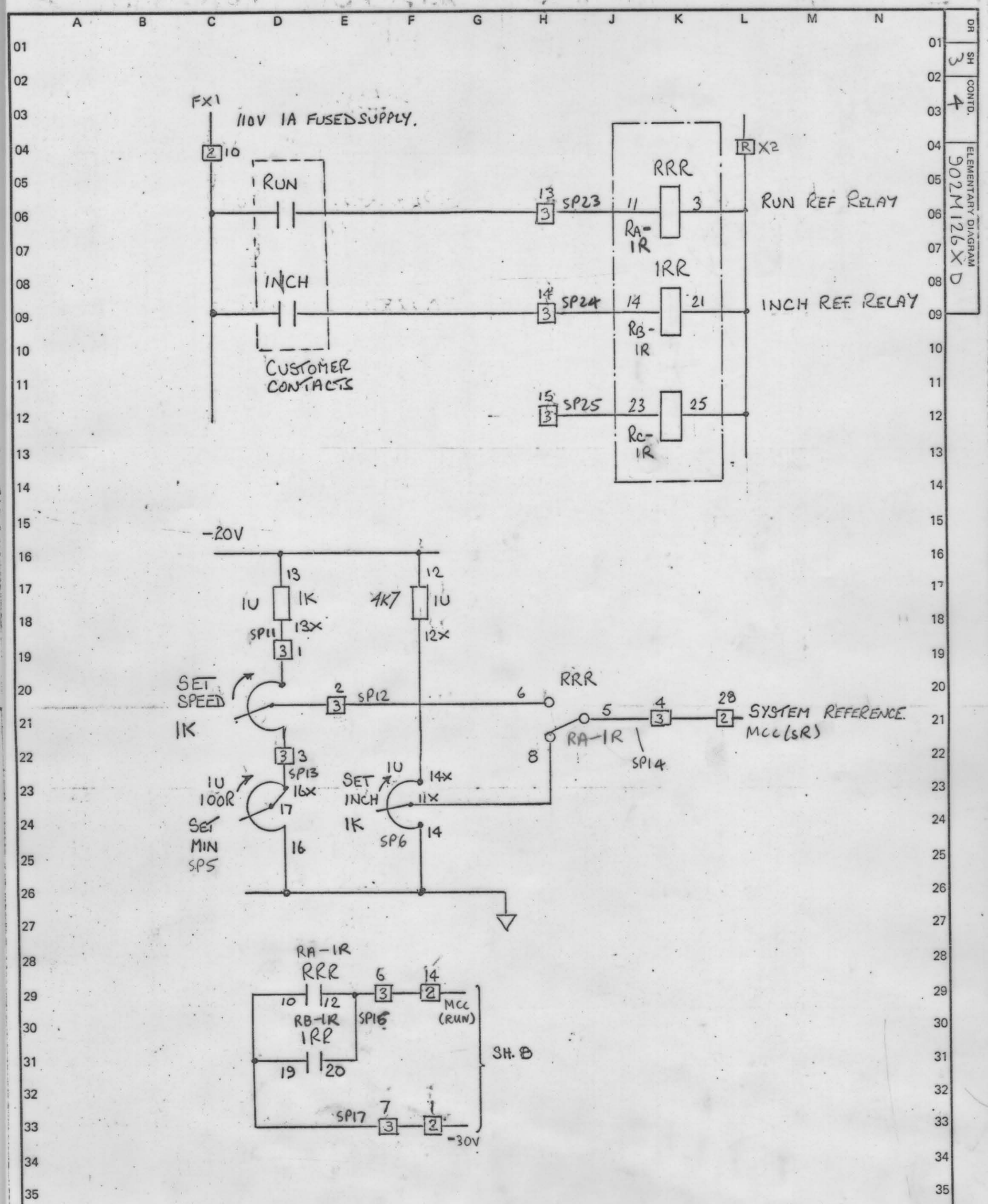

TECHN.	ENG.	APPD.	TECHN.	ENG. NGM	APPD.	DATE 17/3/83			
			2	25/5/83		TECHN.	ALLENWEST Simplex VARIABLE SPEED DRIVES OPERATION, BRIGHTON, ENGLAND.	BDC 3064R 50HP REFERENCE CIRCUITS	IDENT
						ENG. NGM			DR / SH 3
						APPD.		GO NUMBER 310N01 / ELEMENTARY DIAGRAM 902M126XD / CONTD. 4	

Disclaimer Statement The trade mark is the trade mark of General Electric Company of U.S.A., which is not connected with the English Company of a similar name.

DR	SH	CONTD.	ELEMENTARY DIAGRAM
	4	5	902M126XD

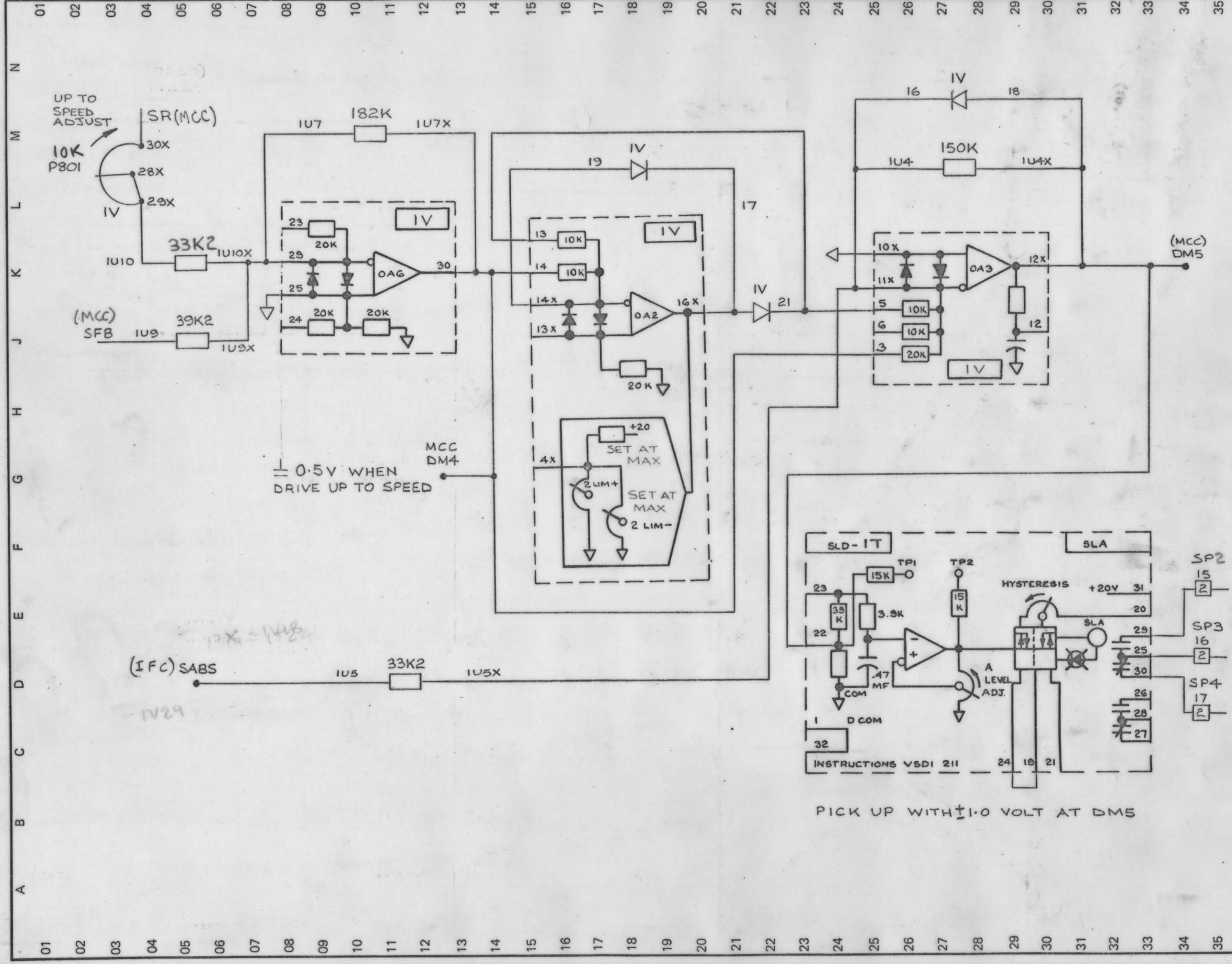

IDENT

DR SH 4

BDC 3064R 50HP
KEIGHLEY GRINDERS
UP TO SPEED CIRCUIT

CONTD. 5

GO NUMBER 310N01 | ELEMENTARY DIAGRAM 902M126

ALLENWEST

Simplex

VARIABLE SPEED DRIVES OPERATION, BRIGHTON, ENGLAND.

TECHN.	ENG.	APPD.	DATE 17/3/83
TECHN.	ENG. NGM	APPD.	TECH
			ENG. NGM
			APPD.

2 25/5/83

Disclaimer Statement The trade mark is the trade mark of General Electric Company of U.S.A., which is not connected with the English Company of a similar name.

BDC 3064R

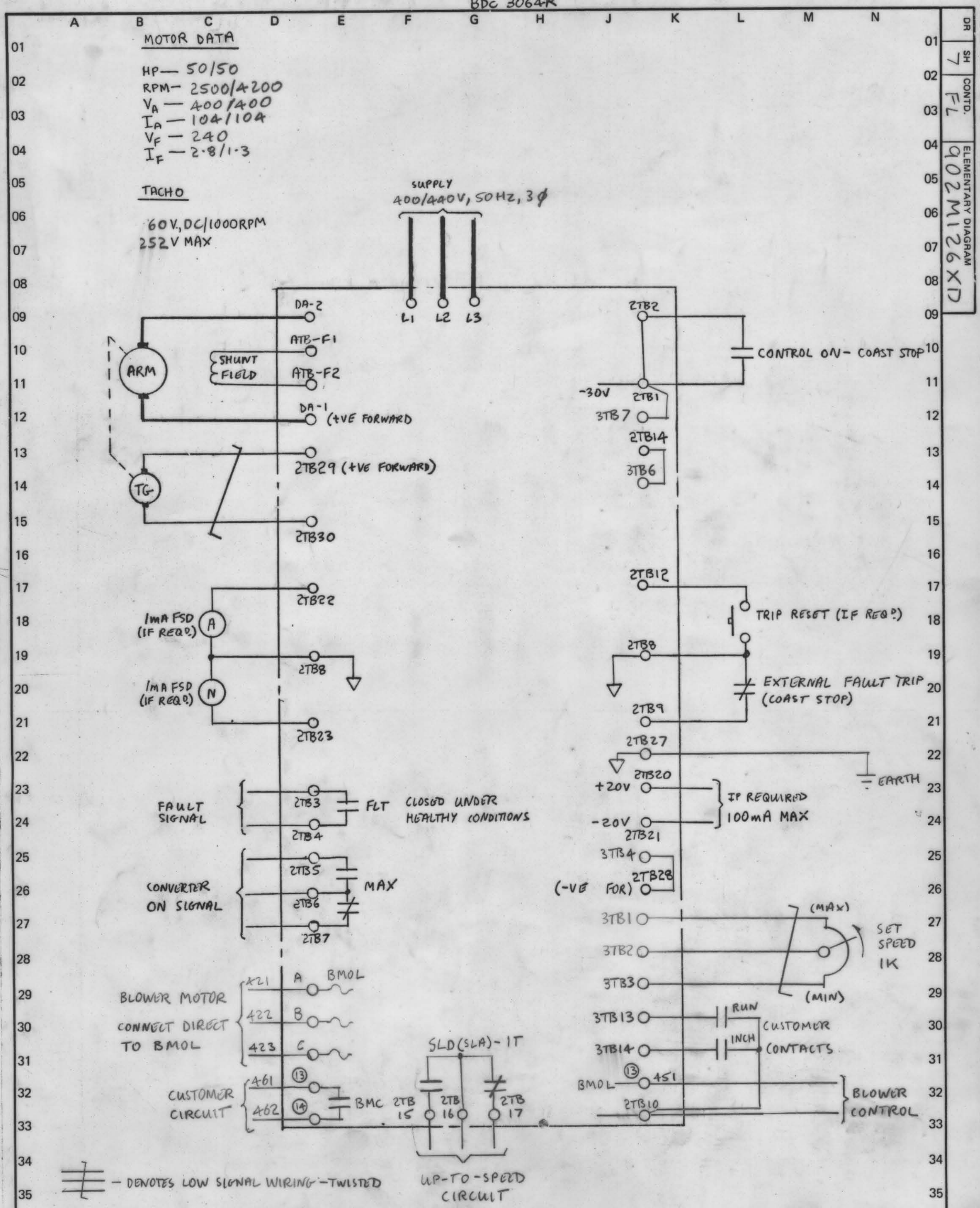

TECHN.	ENG.	APPD.	TECHN.	ENG.	APPD.	DATE			
				NGM		21/3/83	ALLENWEST	BDC 3064R 50HP EXTERNAL CONNECTIONS KEIGHLEY GRINDERS	IDENT
			2		25/5/83	TECHN.	Simplex		DR / SH
						ENG. NGM	VARIABLE SPEED DRIVES OPERATION, BRIGHTON, ENGLAND.		7
						APPD.		GO NUMBER 310N01 / ELEMENTARY DIAGRAM 902M126XD / CONTD. FL	

Disclaimer Statement The GE trade mark is the trade mark of General Electric Company of U.S.A., which is not connected with the English Company of a similar name.

VOLTAGE POLARIES SHOWN ARE FOR MOTORING DA1(+)

HARDWARE ABBREVIATIONS

MCC	MAIN CONTROL CARD
IFC	INTERFACE CARD
PSC	POWER SUPPLY CARD
SCR	THYRISTOR ASSEMBLY
DGC	DIAGNOSTIC CARD
MFC	MOTOR FIELD CONTROL
MFE	MOTOR FIELD EXCITER
MDR	MODIFICATION RACK
ACC	AUXILIARY CONTROL CARD

SYMBOLS

AMPLIFIERS

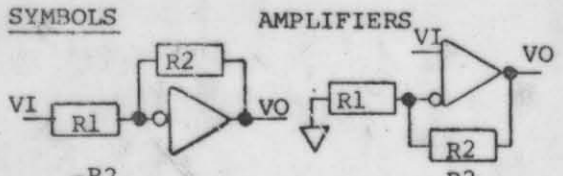

$VO = \frac{-R2}{R1} VI$ $\qquad$ $VO = (1 + \frac{R2}{R1}) VI$

CASE GROUND

VI ( ) ABS VO — VO = SIGN () X ABSOLUTE VALUE OF VI

STAB ON TERMINAL

TERMINAL AT 2TB, 3TB, 4TB, RTB.
EX: 9 [2] - 2TB9; X2 [2] - RTBX2

TERMINAL AT T.B.'s

POTENTIOMETER ARROWS ON THE CARD ELEMENTARY DIAGRAMS INDICATE THE WIPER DIRECTION AS THE POTENTIOMETER SHAFT IS ROTATED CLOCKWISE TO INCREASE FUNCTION.

▲ THESE RESISTORS ARE CRIMPED IN WIRE HARNESS.

FUNCTION	USE	LOC	JUMPERS
60HZ	X	MFC	ZA-ZB (IF USED)
50HZ		MCC	HZA - PHA
IOC-400%	X		(NONE)
-500%		IFC	I - IHI
-300%		IFC	I-ILO
SR5 - 9v	✓		NONE)
9 - 20v		MCC	SRH - COM
JOGR 10v			(NONE)
20V		MCC	JH - COM
LT.3-7sec.			(NONE)
2 - 60sec	✓		332Ω FROM LTI TO COM
VREG			NT-CEMF CC-COM
DC TACHO	✓		(NONE)
AC TACHO		MCC	AT1 - AT2
TACHO FILT		IFC	TC - TC
TACHO V. 24-64vdc		IFC	NT-NT1 PT - PT1
27-71vac		IFC	NT-NT1 PT - PT1
60-160vdc		IFC	NT-NT2 PT - PT2
66-177vac		IFC	NT-NT2 PT - PT2
110-300vdc	✓	IFC	NT-NT3 PT - PT3
120-300vac		IFC	NT-NT3 PT - PT3
G134 G256		IFC	MFC OR MFE
MAX AMPS .8 1.7		MF	NONE
1.3 2.8		MF	YB - YD
2.4 5.0		MF	YA - YB
4.0 8.0	✓	MF	YA-YB, YC-YD
7.0 13		MF	YA - YC
13 25		MF	YA-YC, YB-YD
L/R<.25S		MFC	QA - QB
INH RUN		DGC	D1-D2 (IF USED)
INH DRV CL		MCC	DC1 - COM
FUSELESS		ACC	CFY - CFX

SEE NOTE

SIGNAL DEFINITIONS AND LOCATIONS

*	CEMF	COUNTER EMF (0316)
*	CFB	CURRENT FEEDBACK (0316)
	CMFA	ABSOLUTE VALUE CEMF (0308)
	CRM	CROSSOVER MODIFY (0311)
	DFP	DELAYED FIRING POWER (0325)
*	DR	DRIVER REFERENCE (0333)
*	EAO	ERROR AMP OUTPUT (0333)
	EST	EXTERNAL FLT STOP INPUT (0314)
	FALT	FAULT (0314)
*	FC	FIELD CURRENT (NS26)
	FDR	FIELD DIAGNOSTIC REFERENCE (0408)
	FEA	FIELD ECONOMY ADJUST (0325)
	FF	FIELD FAULT (0328)
	IABS	MOTOR CURRENT ABSOLUTE (0309)
	ILA	CURRENT LIMIT ADJUST (0323)
	IMET	CURRENT SIGNAL FOR METER (0310)
*	IPU	INITIAL PULSE (0320)
*	LR	LOCAL REF. FROM DGC (0333)
*	JOG	JOG SWITCH INPUT (0323)
*	JOGR	JOG REFERENCE INPUT (0331)
*	MAC	MAX/MA CONTROL SIGNAL (0320)
	MSW	MODE SWITCH (0330)
*	OSC	OSCILLATOR (0317)
*	PCR	PHASE CONTROL REF. (0326)
*	PRE	DRIVE PRECONDITION (0321)
	ØSEQ	PHASE SEQUENCE (0314)
	RERR	REGULATOR ERROR (0327)
	RIJ	INTEGRATOR SUMMING JUNCTION (0327)
	RJ	REGULATOR SUMMING JUNCTION (0331)
	RRA	REGULATOR RESPONSE ADJUST (0330)
	RSET	RESET (0316)
*	RTR	READY TO RUN (0316)
*	RUN	RUN SWITCH INPUT (0321)
*	SA-C	PHASE SYN OUTPUT (0316)
*	SFB	SPEED FEEDBACK (0320)
	SMET	SPEED SIGNAL FOR METER (0312)
*	SR	SYSTEM REFERENCE INPUT (0329)
*	SYS	SYSTEM FAULT TRIP (0313)
*	TA	OUTPUT FOR TACHO TRIP ADJUST (0320)
	TF	TACHO FAULT (NS28)
*	TFB	TACHOMETER FEEDBACK (0320)
	TFR	AC TACHO FREQUENCY OUTPUT (0313)
*	TR	TIMED REFERENCE (0333)
*	VFB	VOLTAGE FEEDBACK (0319)
*	WFR	WEAK FIELD REFERENCE (0320)

(* - TEST POINT ON DOOR FRONT)

MAPPING SYSTEM

(NS/PS/TS) PS - PAST SHEET
NS - NEXT SHEET
TS - THIS SHEET

HENCE (PS - 12) DENOTES LOCATION ON PAST SHEET LINE 12. OTHER LOCATIONS ARE DENOTED BY SHEET NUMBER AND LINE? E.G. (1A16) SIGNIFIES LOCATION ON SHEET 1A, LINE 16 ETC.

NOTE: FIELD EFFECT TRANSISTOR: THE CLOSED/OPEN (I/O) STATE OF THESE SWITCHED FOR "PRECONDITION" - "RUN" OR JOG" - "DIAGNOSTIC STATIC" - "DIAGNOSTIC RUN" IS SHOWN BY A FOUR DIGIT WORD WITH STATE SEQUENCE.

TEST ON 50HZ.

NOTE CHANGE LINKS TO 60HZ ON INSTALLATION

TECHN.	ENG.	APPD.	TECHN.	ENG.	APPD.	DATE 17-5-82
						TECHN.
						ENG.
						APPD.

ALLENWEST Simplex VARIABLE SPEED DRIVES OPERATION, BRIGHTON, ENGLAND.

BDC 3064R 20 HP FOR KEIGHLEY GRINDERS

GO NUMBER	ELEMENTARY DIAGRAM	CONTD.
206N00	902M126ED	2

IDENT DR SH 1

Disclaimer Statement The trade mark is the trade mark of General Electric Company of U.S.A., which is not connected with the English Company of a similar name.

1 2 902M126ED

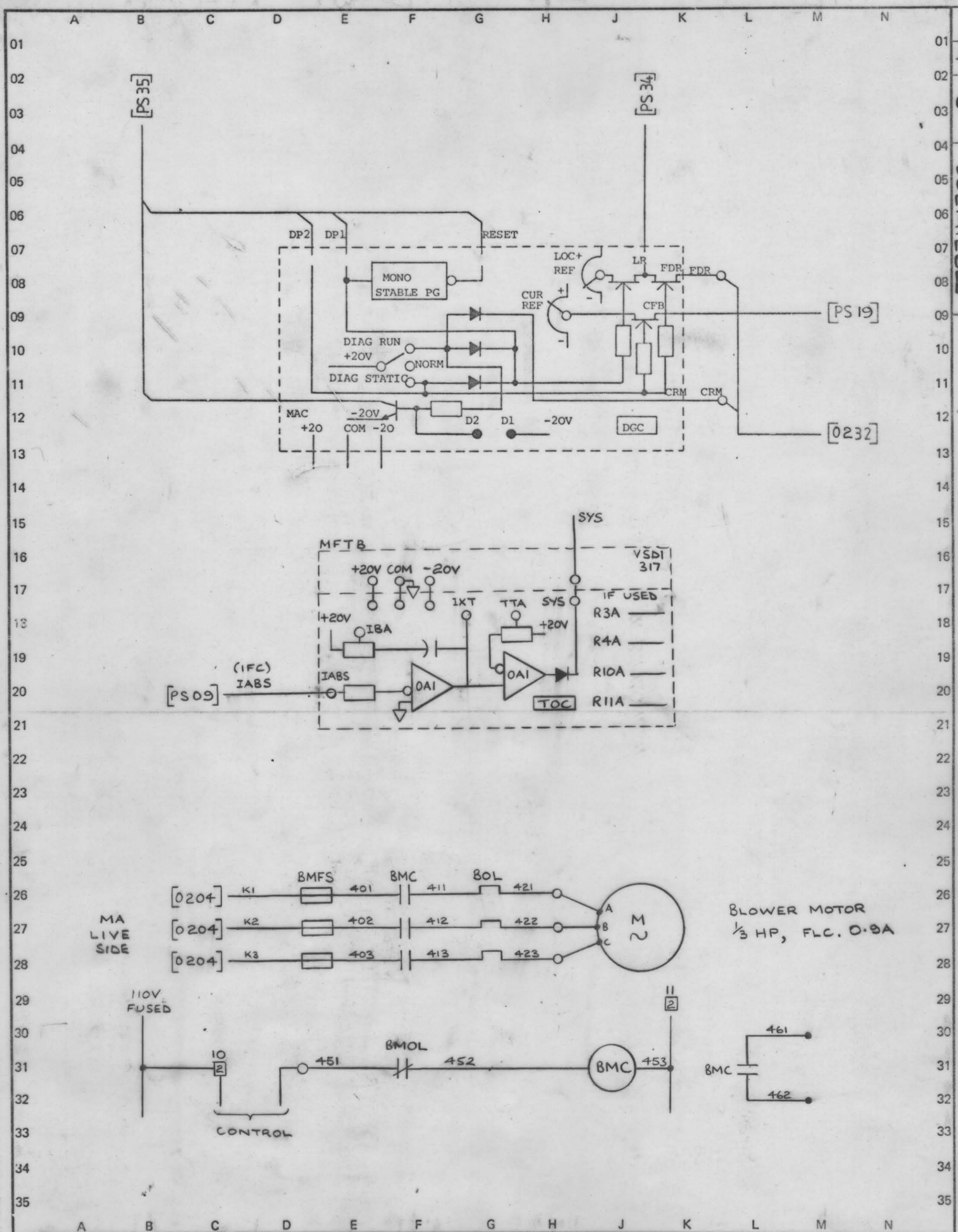

TECHN.	ENG.	APPD.	TECHN.	ENG.	APPD.	DATE 10-5-82
						TECHN.
						ENG.
						APPD.

ALLENWEST Simplex
VARIABLE SPEED DRIVES OPERATION, BRIGHTON, ENGLAND.

BDC 3064R 20 HP

FOR KEIGHLEY GRINDERS

GO NUMBER	ELEMENTARY DIAGRAM	CONTD.
206N00	902M126ED	5

IDENT

DR | SH 4

UR | SH 4 | CONTD. 5 | ELEMENTARY DIAGRAM 902M126ED

Disclaimer Statement The trade mark is the trade mark of General Electric Company of U.S.A., which is not connected with the English Company of a similar name.

DR	SH	CONTD.	ELEMENTARY DIAGRAM
	5	6	902M126ED

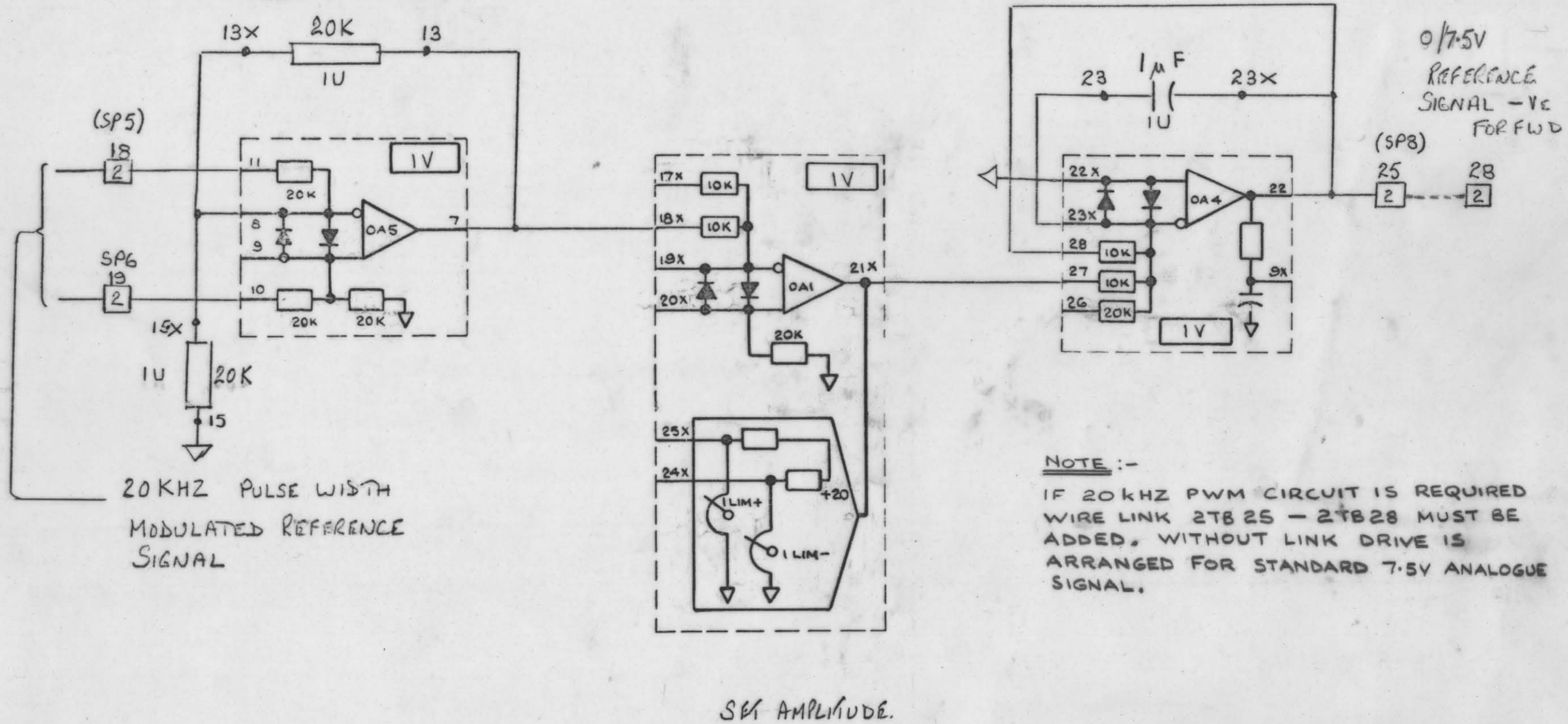

NOTE :-

IF 20kHZ PWM CIRCUIT IS REQUIRED WIRE LINK 2TB25 — 2TB28 MUST BE ADDED. WITHOUT LINK DRIVE IS ARRANGED FOR STANDARD 7.5V ANALOGUE SIGNAL.

BDC 3064R 20HP REFERENCE CIRCUIT

KEIGHLEY GRINDERS

GO NUMBER	ELEMENTARY DIAGRAM	CONTD.
206N00	902M126ED	6

IDENT

DR 5 SH

ALLENWEST

Simplex

VARIABLE SPEED DRIVES OPERATION, BRIGHTON, ENGLAND.

TECHN.		DATE	15-5-82
ENG.		TECHN.	
APPD.		ENG.	
		APPD.	

Disclaimer Statement The trade mark is the trade mark of General Electric Company of U.S.A., which is not associated with the English Company of a similar name.

DR	SH	CONTD.	ELEMENTARY DIAGRAM
	8	9	902M126ED

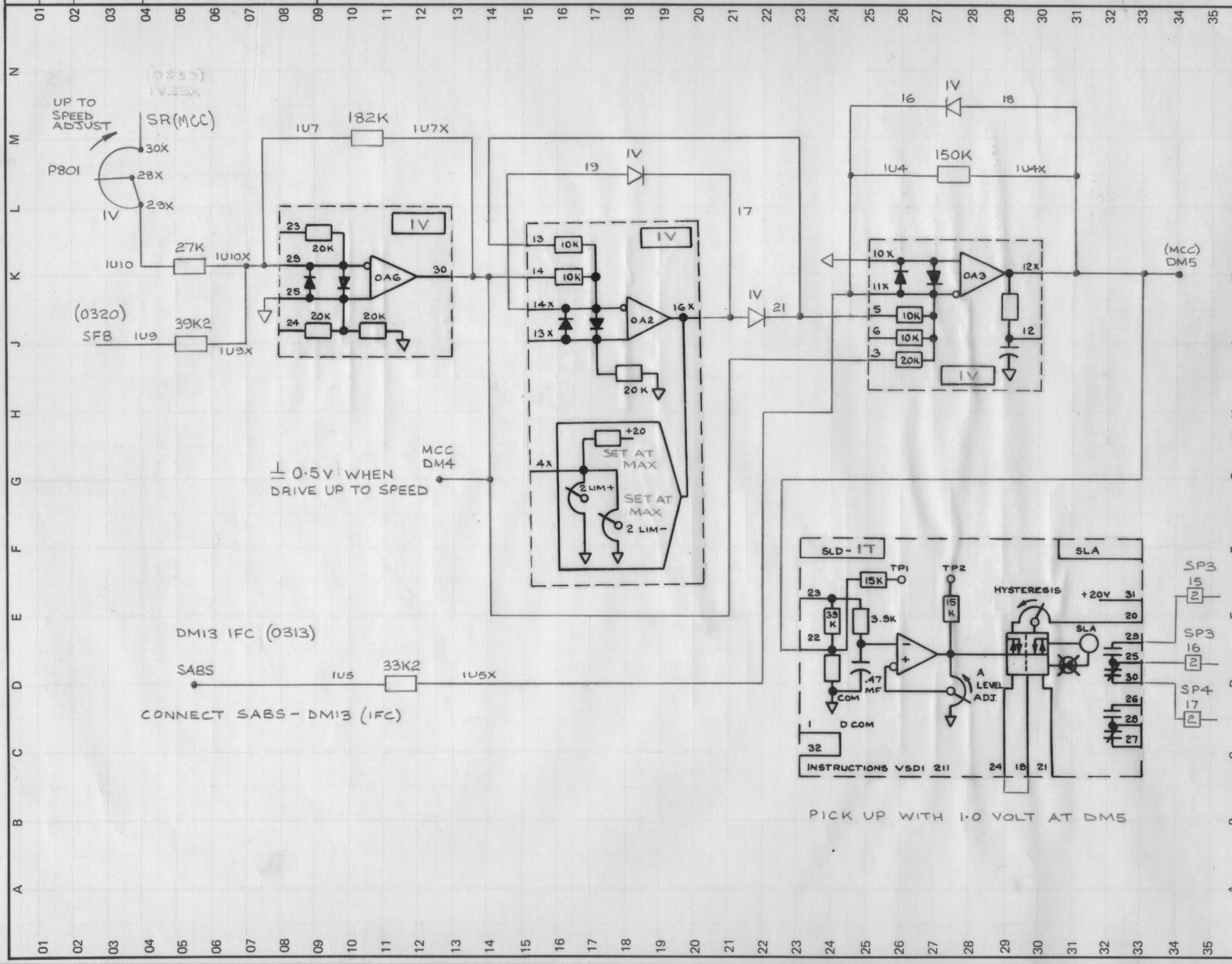

IDENT

DR	SH
	8

BDC 3064R 20HP
KEIGHLEY GRINDERS
UP TO SPEED CIRCUIT

GO NUMBER	ELEMENTARY DIAGRAM	CONTD.
206N00	902M126ED	9

ALLENWEST
Simplex
VARIABLE SPEED DRIVES OPERATION, BRIGHTON, ENGLAND.

DATE 17-5-82	TECHN.	ENG.	APPD.
TECHN.	ENG.	APPD.	
TECHN.	ENG.	APPD.	

Disclaimer Statement The ® trade mark is the trade mark of General Electric Company of USA

BDC 3064R

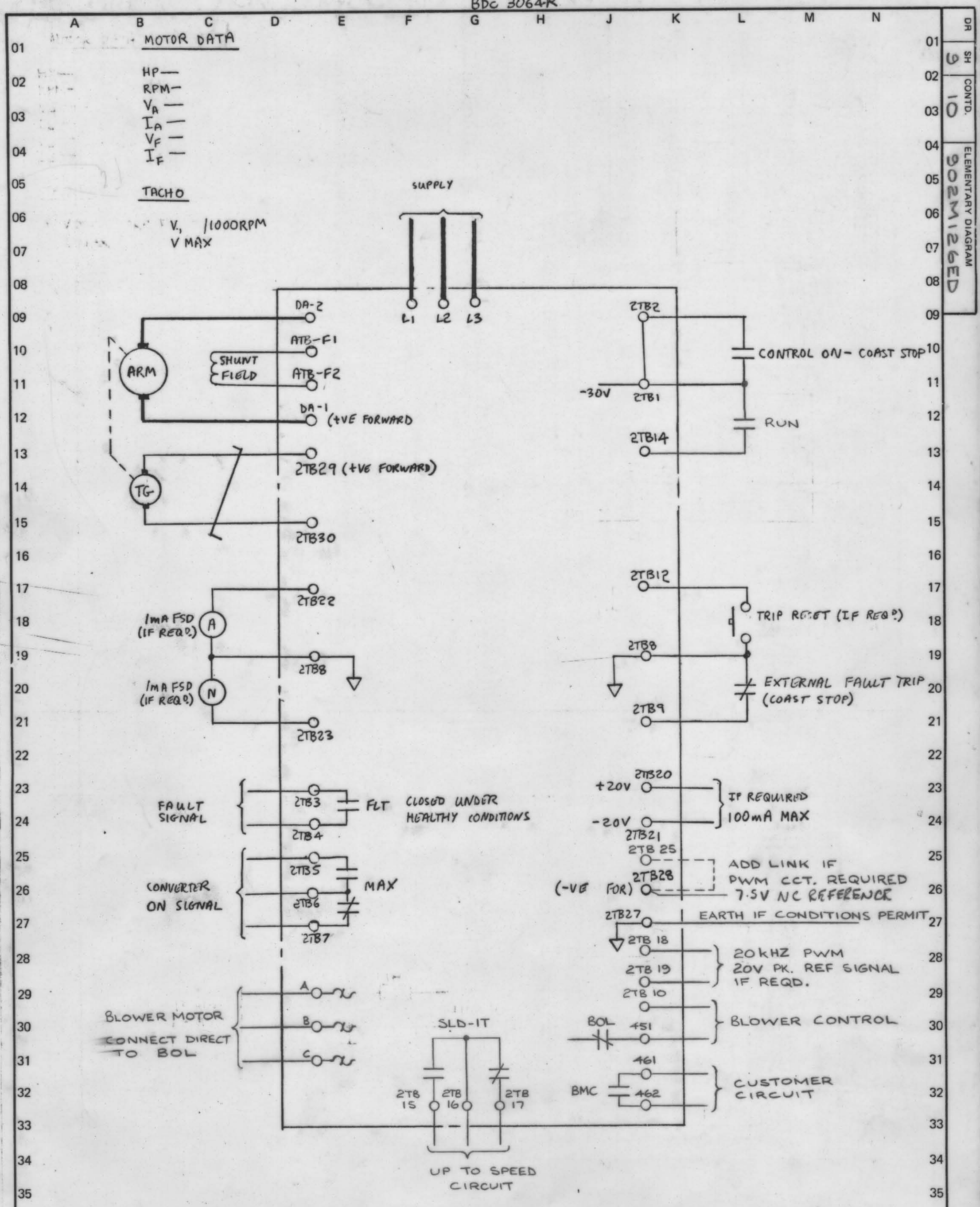

TECHN.	ENG.	APPD.	TECHN.	ENG.	APPD.	DATE 17-5-82	ALLENWEST Simplex	BDC 3064R 20HP KEIGHLEY GRINDERS DRIVE CONNECTIONS	IDENT DR	SH
						TECHN.	VARIABLE SPEED DRIVES OPERATION, BRIGHTON, ENGLAND.	GO NUMBER 206N00 / ELEMENTARY DIAGRAM 902M126ED / CONTD. 10		9
						ENG.				
						APPD.				

DR 9 SH CONTD. 10 ELEMENTARY DIAGRAM 902M126ED

Disclaimer Statement The trade mark is the trade mark of General Electric Company of U.S.A., which is not connected with the English Company of a similar name.

VOLTAGE POLARIES SHOWN ARE FOR MOTORING DA1(+)

HARDWARE ABBREVIATIONS

MCC	MAIN CONTROL CARD
IFC	INTERFACE CARD
PSC	POWER SUPPLY CARD
SCR	THYRISTOR ASSEMBLY
DGC	DIAGNOSTIC CARD
MFC	MOTOR FIELD CONTROL
MFE	MOTOR FIELD EXCITER
MDR	MODIFICATION RACK
ACC	AUXILIARY CONTROL CARD

SYMBOLS

AMPLIFIERS

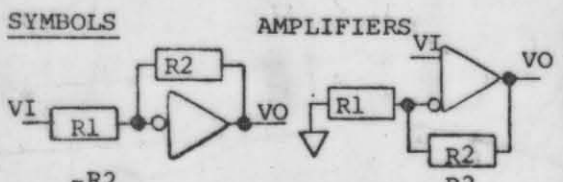

$VO = \frac{-R2}{R1} VI$ $VO = (1 + \frac{R2}{R1}) VI$

CASE GROUND

VI ( ) ABS VO — VO = SIGN () X ABSOLUTE VALUE OF VI

STAB ON TERMINAL

TERMINAL AT 2TB, 3TB, 4TB, RTB.
EX: 9 [2] - 2TB9; X2 [R] - RTBX2

TERMINAL AT T.B.'s

POTENTIOMETER ARROWS ON THE CARD ELEMENTARY DIAGRAMS INDICATE THE WIPER DIRECTION AS THE POTENTIOMETER SHAFT IS ROTATED CLOCKWISE TO INCREASE FUNCTION.

THESE RESISTORS ARE CRIMPED IN WIRE HARNESS.

FUNCTION	USE	LOC	JUMPERS
60HZ	X	MFC	ZA-ZB (IF USED)
50HZ		MCC	HZA - PHA
IOC-400%	X		(NONE)
-500%		IFC	I - IHI
-300%		IFC	I-ILO
SR5 - 9v			NONE)
9 - 20v	X	MCC	SRH - COM
JOGR 10v			(NONE)
20V		MCC	JH - COM
LT.3-7sec.	X		(NONE)
2 - 60sec			332Ω FROM LTI TO COM
VREG			NT-CEMF CC-COM
DC TACHO			(NONE)
AC TACHO	X	MCC	AT1 - AT2
TACHO FILT		IFC	TC - TC
TACHO V. 24-64vdc		IFC	NT-NT1 PT - PT1
27-71vac		IFC	NT-NT1 PT - PT1
60-160vdc		IFC	NT-NT2 PT - PT2
66-177vac	X	IFC	NT-NT2 PT - PT2
110-300vdc		IFC	NT-NT3 PT - PT3
120-300vac		IFC	NT-NT3 PT - PT3
G134 G256		IFC	MFC OR MFE
MIN .8 1.7		MF	NONE
1.3 2.8		MF	YB - YD
2.4 5.0	X	MF	YA - YB
4.0 8.0		MF	YA-YB, YC-YD
MAX 7.0 13		MF	YA - YC
13 25		MF	YA-YC, YB-YD
L/R < .25S		MFC	QA - QB
INH RUN		DGC	D1-D2 (IF USED)
INH DRV CL		MCC	DC1 - COM
FUSELESS		ACC	CFY - CFX
D.CUR/LIM	X		DCX - DCY

SEE NOTE *

(75% ON 60HZ)

SIGNAL DEFINITIONS AND LOCATIONS

*	CEMF	COUNTER EMF (3 16)
*	CFB	CURRENT FEEDBACK (3 16)
	CMFA	ABSOLUTE VALUE CEMF (3 08)
	CRM	CROSSOVER MODIFY (3 11)
	DFP	DELAYED FIRING POWER (3 25)
*	DR	DRIVER REFERENCE (3 33)
*	EAO	ERROR AMP OUTPUT (3 33)
	EST	EXTERNAL FLT STOP INPUT (3 14)
	FALT	FAULT (3 14)
*	FC	FIELD CURRENT (NS26)
	FDR	FIELD DIAGNOSTIC REFERENCE (4 08)
	FEA	FIELD ECONOMY ADJUST (3 25)
	FF	FIELD FAULT (2 28)
	IABS	MOTOR CURRENT ABSOLUTE (3 09)
	ILA	CURRENT LIMIT ADJUST (3 23)
	IMET	CURRENT SIGNAL FOR METER (3 10)
*	IPU	INITIAL PULSE (3 20)
*	LR	LOCAL REF. FROM DGC (3 33)
*	JOG	JOG SWITCH INPUT (3 23)
*	JOGR	JOG REFERENCE INPUT (3 31)
*	MAC	MAX/MA CONTROL SIGNAL (3 20)
	MSW	MODE SWITCH (3 30)
*	OSC	OSCILLATOR (3 17)
*	PCR	PHASE CONTROL REF. (3 26)
*	PRE	DRIVE PRECONDITION (3 21)
	ØSEQ	PHASE SEQUENCE (3 14)
	RERR	REGULATOR ERROR (3 27)
	RIJ	INTEGRATOR SUMMING JUNCTION (3 27)
	RJ	REGULATOR SUMMING JUNCTION (3 31)
	RRA	REGULATOR RESPONSE ADJUST (3 30)
	RSET	RESET (3 16)
*	RTR	READY TO RUN (3 16)
*	RUN	RUN SWITCH INPUT (3 21)
*	SA-C	PHASE SYN OUTPUT (3 16)
*	SFB	SPEED FEEDBACK (3 20)
	SMET	SPEED SIGNAL FOR METER (3 12)
*	SR	SYSTEM REFERENCE INPUT (3 29)
*	SYS	SYSTEM FAULT TRIP (3 13)
*	TA	OUTPUT FOR TACHO TRIP ADJUST (3 20)
	TF	TACHO FAULT (NS28)
*	TFB	TACHOMETER FEEDBACK (3 20)
	TFR	AC TACHO FREQUENCY OUTPUT (3 13)
*	TR	TIMED REFERENCE (3 33)
*	VFB	VOLTAGE FEEDBACK (3 19)
*	WFR	WEAK FIELD REFERENCE (2 20)

(* - TEST POINT ON DOOR FRONT)

MAPPING SYSTEM

(NS/PS/TS) PS - PAST SHEET
NS - NEXT SHEET
TS - THIS SHEET

HENCE (PS - 12) DENOTES LOCATION ON PAST SHEET LINE 12. OTHER LOCATIONS ARE DENOTED BY SHEET NUMBER AND LINE? E.G. (1A16) SIGNIFIES LOCATION ON SHEET 1A, LINE 16 ETC.

NOTE: FIELD EFFECT TRANSISTOR: THE CLOSED/OPEN (I/O) STATE OF THESE SWITCHED FOR "PRECONDITION" - "RUN" OR JOG" - "DIAGNOSTIC STATIC" - "DIAGNOSTIC RUN" IS SHOWN BY A FOUR DIGIT WORD WITH STATE SEQUENCE.

NOTE *

FIT 50 HZ LINKS FOR TEST
FIT 60 HZ ON INSTALLATION

TECHN.	ENG.	APPD.	TECHN.	ENG.	APPD.	DATE 30.9.82	TECHN.	ENG.	APPD.

ALLENWEST Simplex
VARIABLE SPEED DRIVES OPERATION, BRIGHTON, ENGLAND.

BDC 3064R 40 HP
KEIGHLEY GRINDERS

GO NUMBER	ELEMENTARY DIAGRAM	CONTD.	IDENT DR	IDENT SH
234N00	902M126RF	2		1

Disclaimer Statement The trade mark is the trade mark of General Electric Company of U.S.A., which is not connected with the English Company of a similar name.

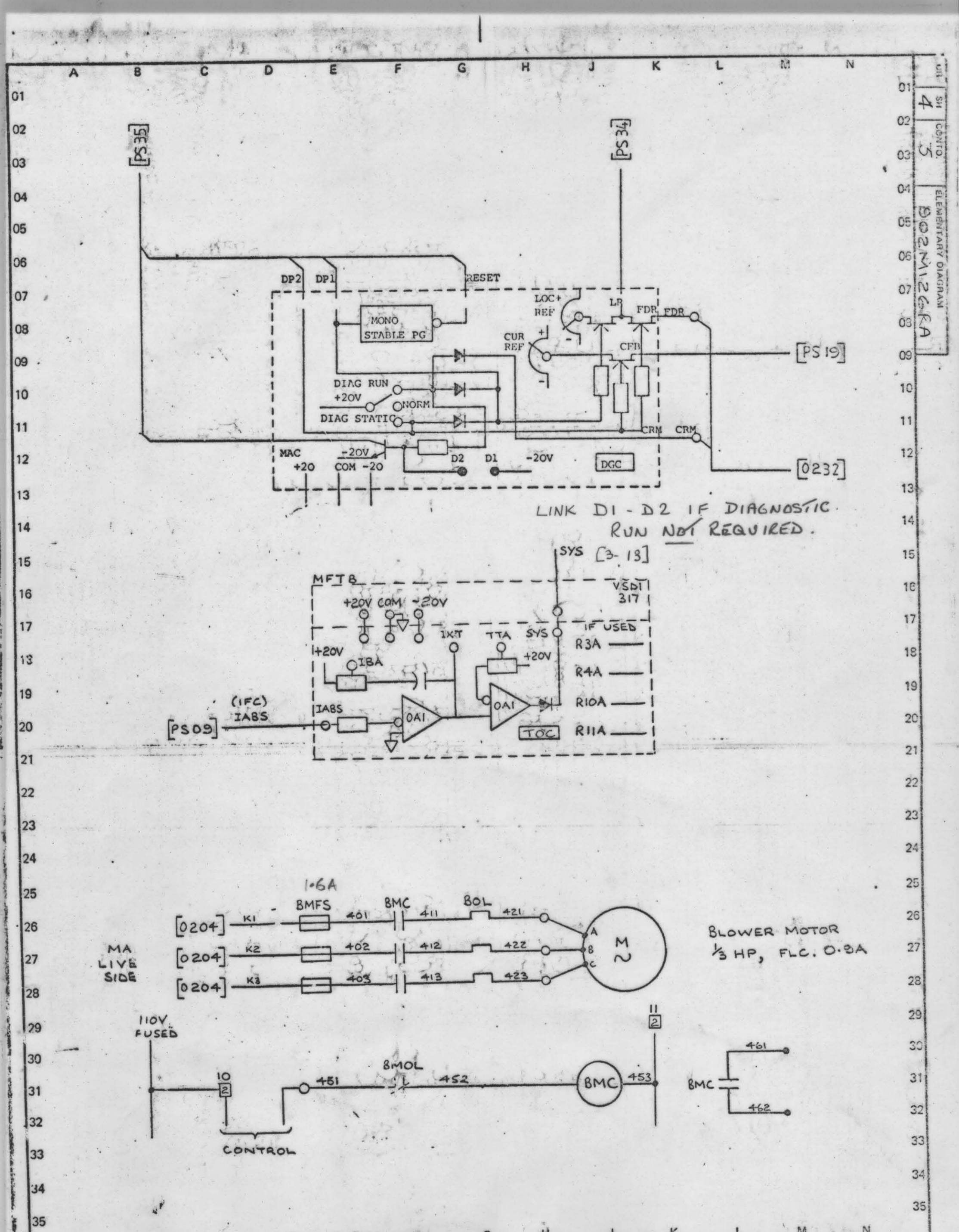

TECHN.	ENG.	APPD.	TECHN.	ENG.	APPD.	DATE 29-9-82
						TECHN
						ENG.
						APPD.

Simplex
VARIABLE SPEED DRIVES OPERATION, BRIGHTON, ENGLAND.

BDC 3064R 25HP

FOR KEIGHLEY GRINDERS

GG NUMBER	ELEMENTARY DIAGRAM	CONTD.	IDENT	SH
234 N00	902M126RF	5		4

Disclaimer Statement The trade mark is the trade mark of General Electric Company of U.S.A., which is not connected with the English Company of a similar name.

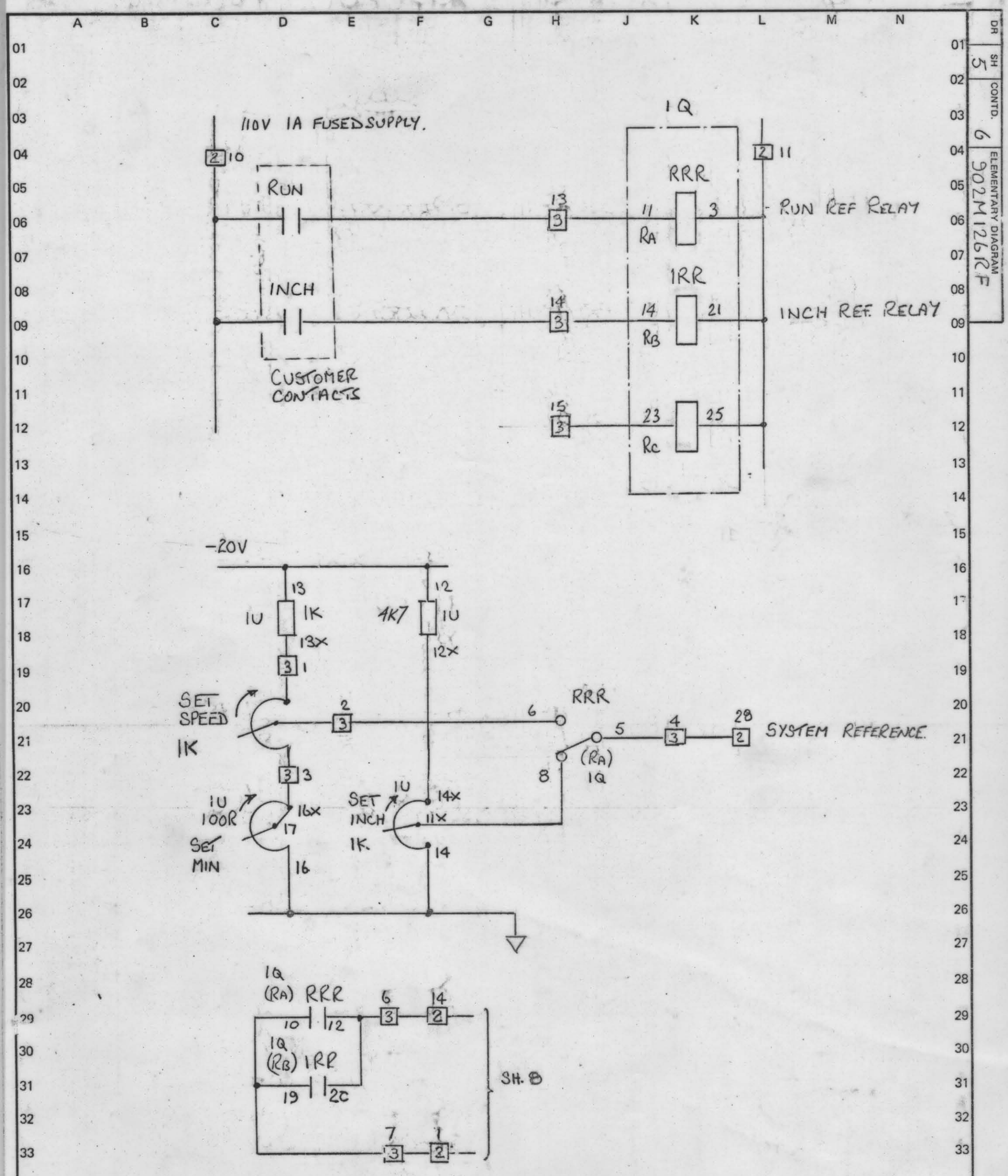

TECHN.	ENG.	APPD.	TECHN.	ENG.	APPD.	DATE 19.8.82	ALLENWEST Simplex VARIABLE SPEED DRIVES OPERATION, BRIGHTON, ENGLAND.	BDC 3064R 25 HP REFERENCE CIRCUITS	IDENT DR	SH
						TECHN.				
						ENG.		GO NUMBER 234N00 / ELEMENTARY DIAGRAM 902M126RF / CONTD. 6		5
						APPD.				

Disclaimer Statement The trade mark is the trade mark of General Electric Company of U.S.A., which is not connected with the English Company of a similar name.

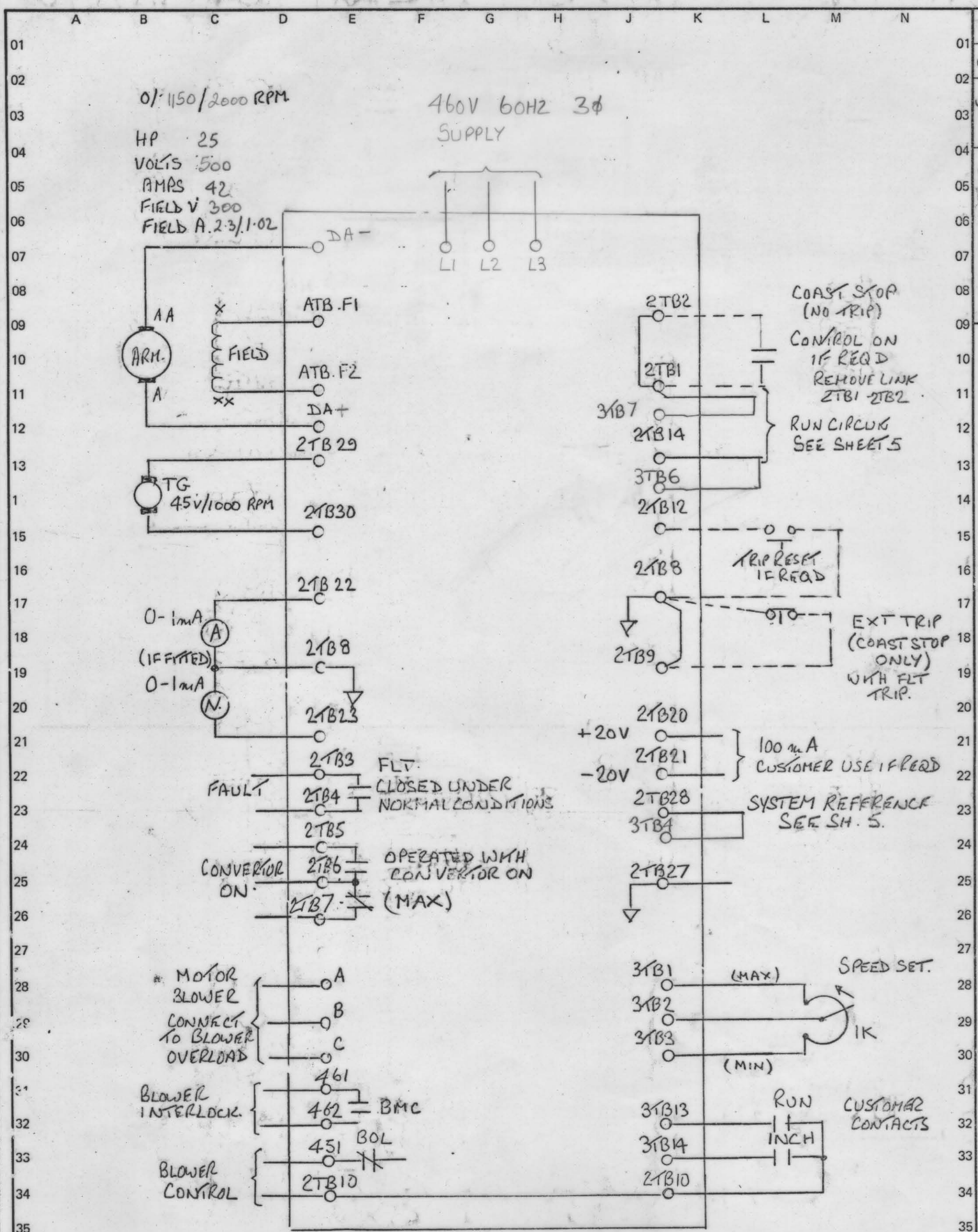

TECHN.	ENG.	APPD.	TECHN.	ENG.	APPD.	DATE 19.9.82	ALLENWEST Simplex VARIABLE SPEED DRIVES/OPERATION, BRIGHTON, ENGLAND.	BDC 3064R 25HP DRIVE EXT CONNECTIONS (KEIGHLEY GRINDERS	IDENT DR SH 8
						TECHN.			
						ENG.			
						APPD.			

GO NUMBER	ELEMENTARY DIAGRAM	CONTD.
23AN00	902M126RF	9

Disclaimer Statement The ⊛ trade mark is the trade mark of General Electric Company of U.S.A., which is not connected with the English Company of a similar name.

3034R

VOLTAGE POLARIES SHOWN ARE FOR MOTORING DA1(+)

HARDWARE ABBREVIATIONS

MCC	MAIN CONTROL CARD
IFC	INTERFACE CARD
PSC	POWER SUPPLY CARD
SCR	THYRISTOR ASSEMBLY
DGC	DIAGNOSTIC CARD
MFC	MOTOR FIELD CONTROL
MDR	MODIFICATION RACK

SYMBOLS

AMPLIFIERS

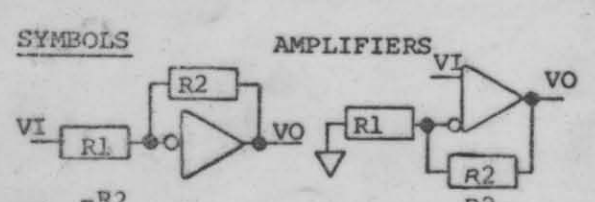

$VO = \frac{-R2}{R1} VI$ $\qquad$ $VO = (1 + \frac{R2}{R1}) VI$

CASE GROUND

VO = SIGN () X ABSOLUTE VALUE OF VI

STAB ON TERMINAL

TERMINAL AT 2TB, 3TB, 4TB, RTB.
EX: 9 [2] - 2TB9; X2 [R] - RTBX2

TERMINAL AT T.B.'s

POTENTIOMETER ARROWS ON THE CARD ELEMENTARY DIAGRAMS INDICATE THE WIPER DIRECTION AS THE POTENTIOMETER SHAFT IS ROTATED CLOCKWISE TO INCREASE FUNCTION.

FUNCTION	USE	LOC	JUMPERS
60HZ		MCC MFC	AA-AS, BA-BS, CA-CS ZA-ZB (IF USED)
50HZ		IFC IFC IFC MCC	0.0047uF RT1-RT2 0.0047uF RT2-RT3 0.0047uF RT3-RT1 AA-AF, BA-BF, CA-CF
IOC-400% -500% -300%	✓		NONE
		IFC	I-IHI
		IFC	I-ILO
SR5 - 9v	✓		(NONE)
9 - 20v		MCC	SRH-COM
JOGR 10v			(NONE)
20V	✓	MCC	JH - COM
LT.3-7sec.	✓		(NONE)
2 - 60sec		MCC	332ΩFROM LT1TOCOM
VREG		IFC	NT-CEMF, CC-COM
DC TACHO			(NONE)
AC TACHO	✓	MCC	AT1-AT2
TACHO FILT		IFC	TC-TC
TACHO V. 24-64vdc		IFC	NT-NT1, PT-PT1
27-71vac		IFC	NT-NT1, PT-PT1
60-160vdc		IFC	NT-NT2, PT-PT2
66-177vac		IFC	NT-NT2, PT-PT2
110-300vdc		IFC	NT-NT3, PT-PT3
120-300vac	✓	IFC	NT-NT3, PT-PT3
G134 G256 Σ .8 1.7		MFC	NONE
Σ 1.3 2.8		MFC	YB-YD
Σ 2.4 5.0		MFC	YA-YB
Σ 4.0 8.0		MFC	YA-YB, YC-YD
Σ 7.0 13		MFC	YA-YC
Σ 13 25		MFC	YA-YC, YB-YD
L/R < .25S		MFC	QA-QB
INH RUN		DGC	D1-D2 (IF USED)

SEE NOTE 1

SIGNAL DEFINITIONS AND LOCATIONS

*	CEMF	COUNTER EMF (3 16)
*	CFB	CURRENT FEEDBACK (3 16)
	CMFA	ABSOLUTE VALUE CEMF (3 08)
	CRM	CROSSOVER MODIFY (2 11)
	DFP	DELAYED FIRING POWER (3 25)
*	DR	DRIVER REFERENCE (3 33)
*	EAO	ERROR AMP OUTPUT (3 33)
	EST	EXTERNAL FLT STOP INPUT (3 14)
	FALT	FAULT (3 14)
*	FC	FIELD CURRENT (NS26)
	FDR	FIELD DIAGNOSTIC REFERENCE (4 08)
	FEA	FIELD ECONOMY ADJUST (3 25)
	FF	FIELD FAULT (2 28)
	IABS	MOTOR CURRENT ABSOLUTE (3 09)
	ILA	CURRENT LIMIT ADJUST (3 23)
	IMET	CURRENT SIGNAL FOR METER (3 10)
*	IPU	INITIAL PULSE (3 20)
*	LR	LOCAL REF. FROM DGC (4 33)
*	JOG	JOG SWITCH INPUT (3 23)
*	JOGR	JOG REFERENCE INPUT (3 31)
*	MAC	MAX/MA CONTROL SIGNAL (3 20)
	MSW	MODE SWITCH (3 30)
*	OSC	OSCILLATOR (3 17)
*	PCR	PHASE CONTROL REF. (3 26)
*	PRE	DRIVE PRECONDITION (3 21)
	ØSEQ	PHASE SEQUENCE (3 14)
	RERR	REGULATOR ERROR (3 27)
	RIJ	INTEGRATOR SUMMING JUNCTION (3 27)
	RJ	REGULATOR SUMMING JUNCTION (3 31)
	RRA	REGULATOR RESPONSE ADJUST (3 30)
	RSET	RESET (3 16)
*	RTR	READY TO RUN (3 16)
*	RUN	RUN SWITCH INPUT (3 21)
*	SA-C	PHASE SYN OUTPUT (3 16)
*	SFB	SPEED FEEDBACK (3 20)
	SMET	SPEED SIGNAL FOR METER (3 12)
*	SR	SYSTEM REFERENCE INPUT (3 29)
*	SYS	SYSTEM FAULT TRIP (3 13)
*	TA	OUTPUT FOR TACHO TRIP ADJUST (3 20)
	TF	TACHO FAULT (NS28)
*	TFB	TACHOMETER FEEDBACK (3 20)
	TFR	AC TACHO FREQUENCY OUTPUT (3 13)
*	TR	TIMED REFERENCE (3 33)
*	VFB	VOLTAGE FEEDBACK (3 19)
*	WFR	WEAK FIELD REFERENCE (3 20)

(* - TEST POINT ON DOOR FRONT)

MAPPING SYSTEM

(NS/PS/TS) PS - PAST SHEET
NS - NEXT SHEET
TS - THIS SHEET

HENCE [PS - 12] DENOTES LOCATION ON PAST SHEET LINE 12. OTHER LOCATIONS ARE DENOTED BY SHEET NUMBER AND LINE, E.G. [1A16] SIGNIFIES LOCATION ON SHEET 1A, LINE 16 ETC.

NOTE: FIELD EFFECT TRANSISTOR: THE CLOSED/OPEN (I/O) STATE OF THESE SWITCHED FOR "PRECONDITION" - "RUN" OR JOG" - "DIAGNOSTIC STATIC" - "DIAGNOSTIC RUN" IS SHOWN BY A FOUR DIGIT WORD WITH STATE SEQUENCE.

▲ THESE RESISTORS ARE CRIMPED IN WIRE HARNESS

NOTE 1:
FIT 50 HZ LINKS AND CAPACITORS FOR TEST.
REMOVE CAPACITORS AND FIT 60HZ LINKS FOR 60 HZ OPERATION.

DR 1 | SH | CONTD. 2 | ELEMENTARY DIAGRAM 902M126RA

TECHN.	ENG.	APPD.	TECHN.	ENG.	APPD.	DATE 19.8.82
						TECHN.
						ENG. PJS
						APPD. REC

ALLENWEST Simplex
VARIABLE SPEED DRIVES OPERATION, BRIGHTON, ENGLAND.

BDC 3034R 40 HP
FOR KEIGHLEY GRINDERS

GO NUMBER	ELEMENTARY DIAGRAM	CONTD.	DR	SH
231N00	902M126RA	2.	–	1

IDENT

Disclaimer Statement The trade mark is the trade mark of General Electric Company of U.S.A., which is not connected with the English Company of a similar name.

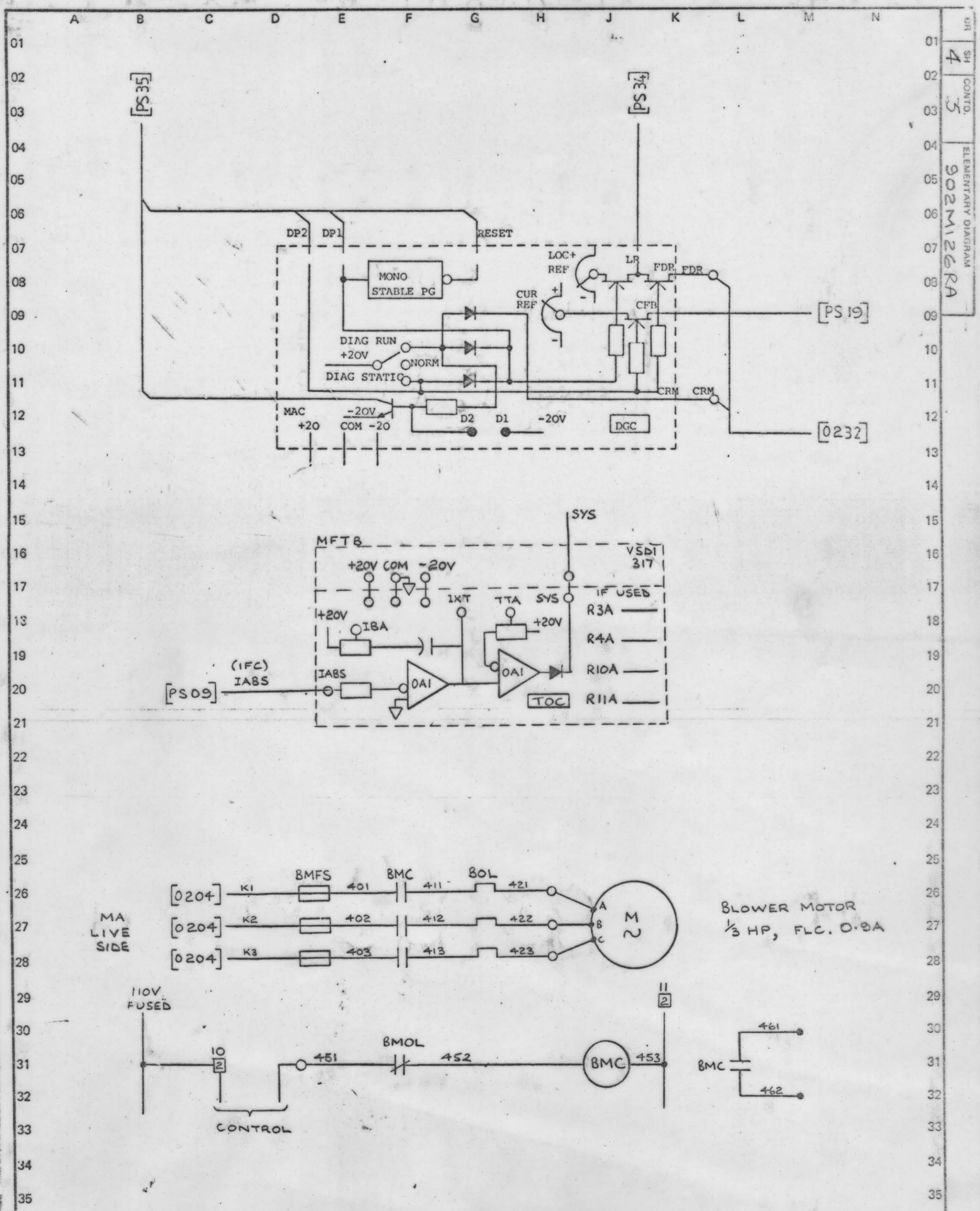

TECHN.	ENG.	APPD.	TECHN.	ENG.	APPD.	DATE 19-8-82	ALLENWEST Simplex VARIABLE SPEED DRIVES OPERATION, BRIGHTON, ENGLAND.	BDC 3034R 4.0 HP FOR KEIGHLEY GRINDERS	IDENT
						TECHN.			
						ENG.			
						APPD.		GO NUMBER 231N00 / ELEMENTARY DIAGRAM 902M126RA / CONTD. 5	DR / SH 4

Disclaimer Statement The ⊕ trade mark is the trade mark of General Electric Company of U.S.A., which is not connected with the English Company of a similar name.

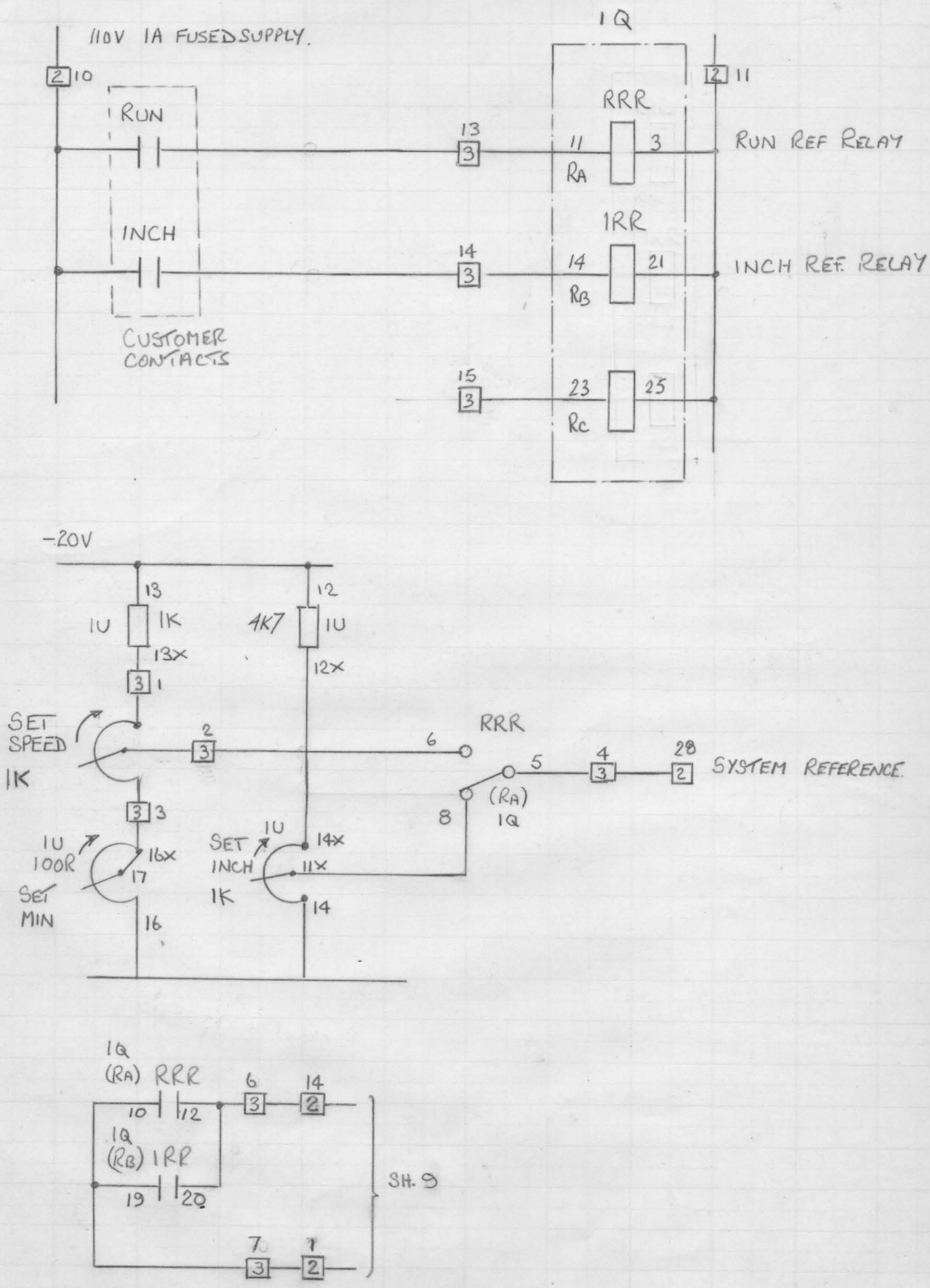

TECHN.	ENG.	APPD.	TECHN.	ENG.	APPD.	DATE 19.8.82
						TECHN.
						ENG.
						APPD.

ALLENWEST Simplex GE
VARIABLE SPEED DRIVES OPERATION, BRIGHTON, ENGLAND.

BDC 3034R 40 HP
REFERENCE CIRCUITS

GO NUMBER	ELEMENTARY DIAGRAM	CONTD.	DR	SH
231N00	902M126RA	6		5

IDENT

Disclaimer Statement The GE trade mark is the trade mark of General Electric Company of U.S.A. which is not connected with the English Company of similar name.

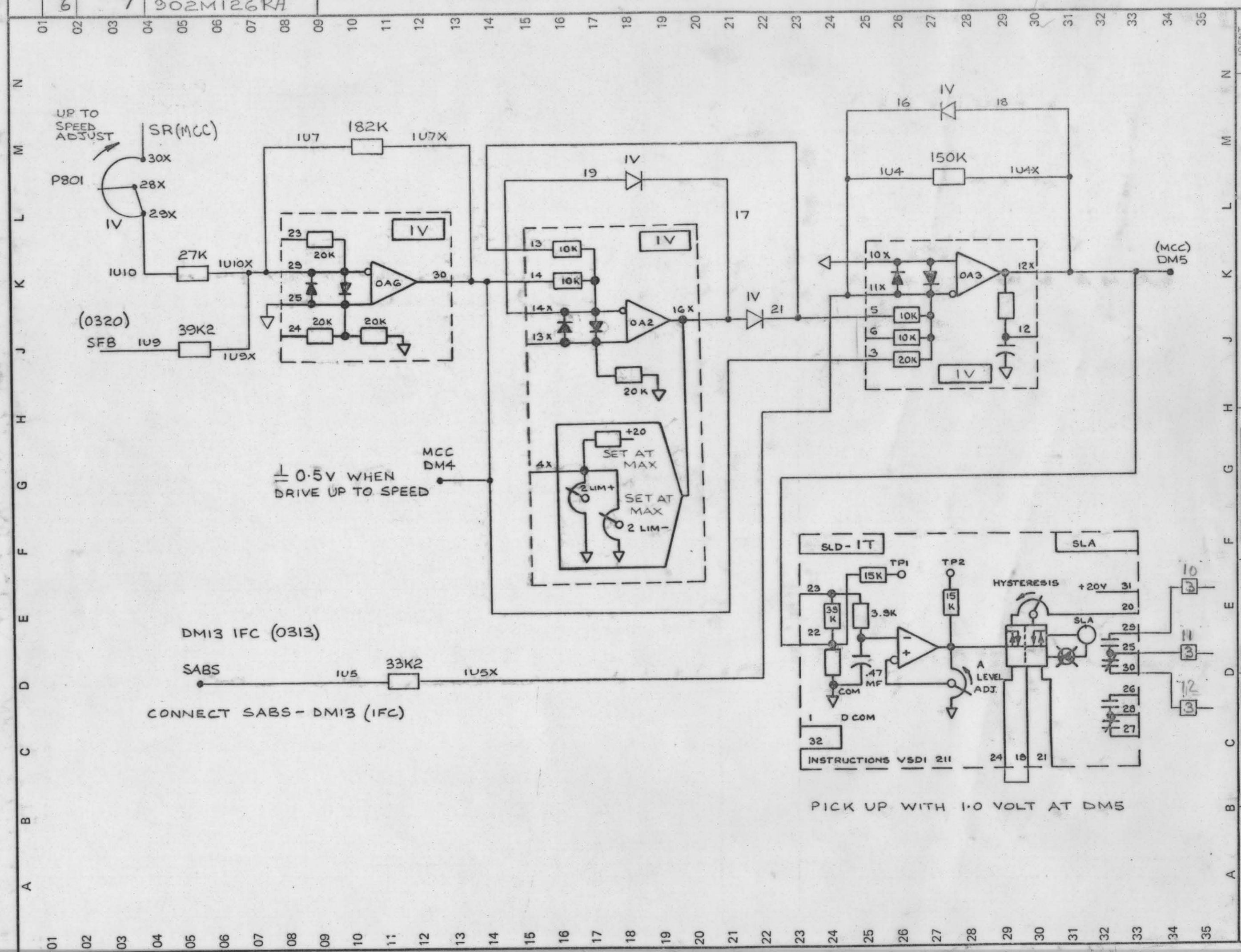

Disclaimer Statement The trade mark is the trade mark of General Electric Company of U.S.A., which is not connected with the English Company of a similar name.

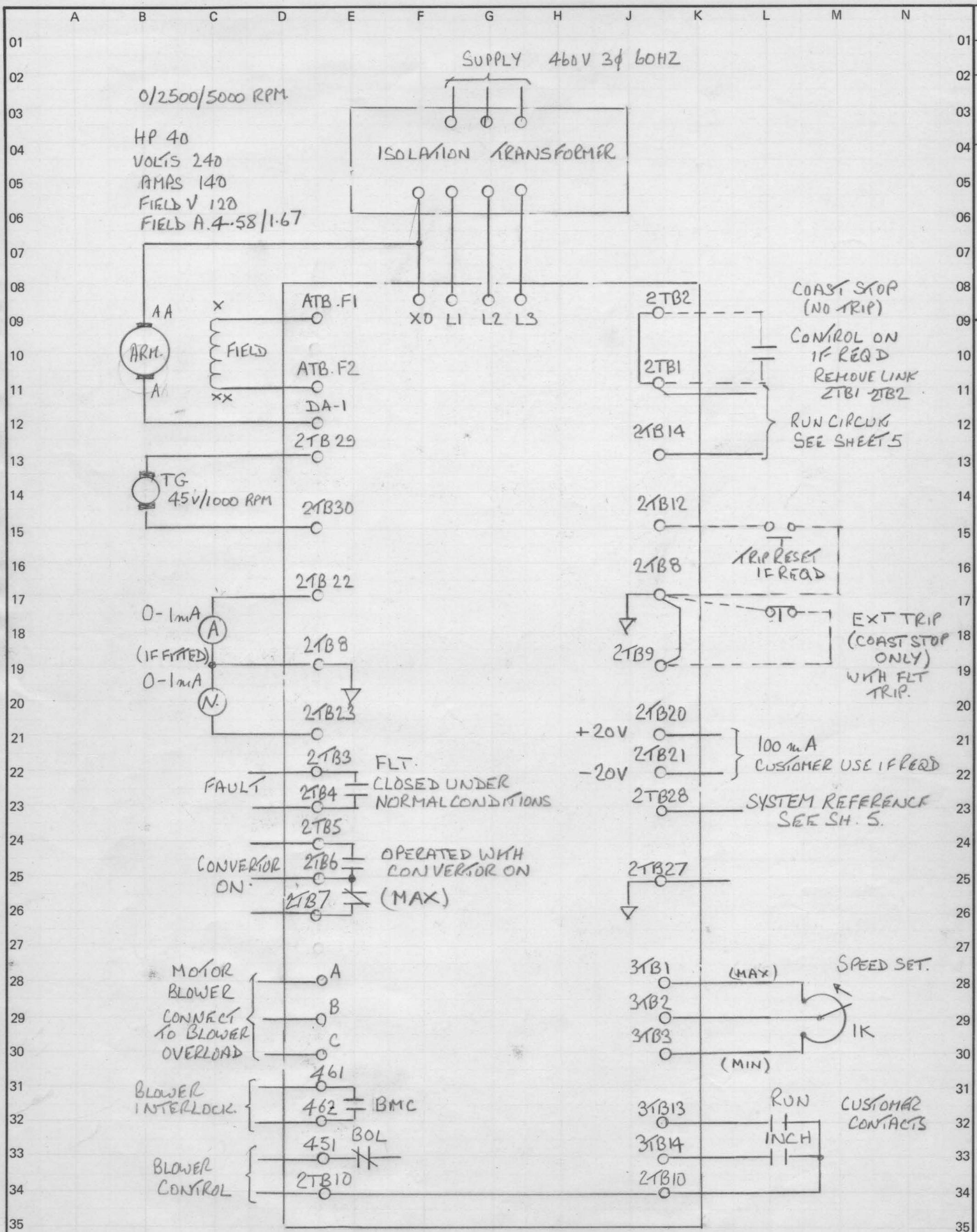

TECHN.	ENG.	APPD.	TECHN.	ENG.	APPD.	DATE 19.8.82	ALLENWEST Simplex	BDC 3034R 40HP DRIVE EXT CONNECTIONS (KEIGHLEY GRINDERS	IDENT DR	SH
						TECHN.	VARIABLE SPEED DRIVES OPERATION, BRIGHTON, ENGLAND.	GO NUMBER 231N00	ELEMENTARY DIAGRAM 902M126RA	CONTD. 10	9
						ENG.				
						APPD.				

DR SH 9 CONTD. 10 ELEMENTARY DIAGRAM 902M126RA

Disclaimer Statement The trade mark is the trade mark of General Electric Company of U.S.A., which is not connected with the English Company of a similar name.

VOLTAGE POLARIES SHOWN ARE FOR MOTORING DA1(+)

HARDWARE ABBREVIATIONS

MCC	MAIN CONTROL CARD
IFC	INTERFACE CARD
PSC	POWER SUPPLY CARD
SCR	THYRISTOR ASSEMBLY
DGC	DIAGNOSTIC CARD
MFC	MOTOR FIELD CONTROL
MDR	MODIFICATION RACK

SYMBOLS

AMPLIFIERS

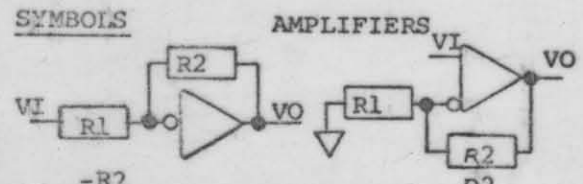

$VO = \frac{-R2}{R1} VI$ $\qquad$ $VO = (1 + \frac{R2}{R1}) VI$

CASE GROUND

VI ( ) VO ABS — VO = SIGN () X ABSOLUTE VALUE OF VI

STAB ON TERMINAL

TERMINAL AT 2TB, 3TB, 4TB, RTB.
EX: 9 [2] - 2TB9; X2 [R] - RTBX2

TERMINAL AT T.B.'s

POTENTIOMETER ARROWS ON THE CARD ELEMENTARY DIAGRAMS INDICATE THE WIPER DIRECTION AS THE POTENTIOMETER SHAFT IS ROTATED CLOCKWISE TO INCREASE FUNCTION.

FUNCTION	USE	LOC	JUMPERS
60HZ	X	MCC MFC	AA-AS, BA-BS, CA-CS ZA-ZB (IF USED)
50HZ		IFC IFC IFC MCC	0.0047uF RT1-RT2 0.0047uF RT2-RT3 0.0047uF RT3-RT1 AA-AF, BA-BF, CA-CF
IOC-400% -500% -300%	X 	 IFC IFC	NONE I-IHI I-ILO
SR5 - 9v 9 - 20v	 X	 MCC	(NONE) SRH-COM
JOGR 10v 20V	 	 MCC	(NONE) JH - COM
LT.3-7sec. 2 - 60sec	X 	 MCC	(NONE) 332ΩFROM LT1TOCOM
VREG DC TACHO AC TACHO	 X	IFC MCC	NT-CEMF, CC-COM (NONE) AT1-AT2
TACHO FILT		IFC	TC-TC
TACHO V. 24-64vdc 27-71vac	 	 IFC IFC	 NT-NT1, PT-PT1 NT-NT1, PT-PT1
60-160vdc 66-177vac	 X	IFC IFC	NT-NT2, PT-PT2 NT-NT2, PT-PT2
110-300vdc 120-300vac	 	IFC IFC	NT-NT3, PT-PT3 NT-NT3, PT-PT3
G134 G256 .8 1.7 1.3 2.8 2.4 5.0 4.0 8.0 7.0 13 13 25	 X 	 MFC MFC MFC MFC MFC MFC	 NONE YB-YD YA-YB YA-YB, YC-YD YA-YC YA-YC, YB-YD
L/R < .25S		MFC	QA-QB
INH RUN		DGC	D1-D2 (IF USED)

SIGNAL DEFINITIONS AND LOCATIONS

*	CEMF	COUNTER EMF (316)
*	CFB	CURRENT FEEDBACK (316)
	CMFA	ABSOLUTE VALUE CEMF (308)
	CRM	CROSSOVER MODIFY (311)
	DFP	DELAYED FIRING POWER (325)
*	DR	DRIVER REFERENCE (333)
*	EAO	ERROR AMP OUTPUT (333)
	EST	EXTERNAL FLT STOP INPUT (314)
	FALT	FAULT (314)
*	FC	FIELD CURRENT (NS26)
	FDR	FIELD DIAGNOSTIC REFERENCE (408)
	FEA	FIELD ECONOMY ADJUST (325)
	FF	FIELD FAULT (328)
	IABS	MOTOR CURRENT ABSOLUTE (309)
	ILA	CURRENT LIMIT ADJUST (323)
	IMET	CURRENT SIGNAL FOR METER (310)
*	IPU	INITIAL PULSE (320)
*	LR	LOCAL REF. FROM DGC (333)
*	JOG	JOG SWITCH INPUT (323)
*	JOGR	JOG REFERENCE INPUT (331)
*	MAC	MAX/MA CONTROL SIGNAL (320)
	MSW	MODE SWITCH (330)
*	OSC	OSCILLATOR (317)
*	PCR	PHASE CONTROL REF. (326)
*	PRE	DRIVE PRECONDITION (321)
	ØSEQ	PHASE SEQUENCE (314)
	RERR	REGULATOR ERROR (327)
	RIJ	INTEGRATOR SUMMING JUNCTION (327)
	RJ	REGULATOR SUMMING JUNCTION (331)
	RRA	REGULATOR RESPONSE ADJUST (330)
	RSET	RESET (316)
*	RTR	READY TO RUN (316)
*	RUN	RUN SWITCH INPUT (321)
*	SA-C	PHASE SYN OUTPUT (316)
*	SFB	SPEED FEEDBACK (320)
	SMET	SPEED SIGNAL FOR METER (312)
*	SR	SYSTEM REFERENCE INPUT (329)
*	SYS	SYSTEM FAULT TRIP (313)
*	TA	OUTPUT FOR TACHO TRIP ADJUST (320)
	TF	TACHO FAULT (NS28)
*	TFB	TACHOMETER FEEDBACK (320)
	TFR	AC TACHO FREQUENCY OUTPUT (313)
*	TR	TIMED REFERENCE (333)
*	VFB	VOLTAGE FEEDBACK (319)
*	WFR	WEAK FIELD REFERENCE (320)

(* - TEST POINT ON DOOR FRONT)

MAPPING SYSTEM

(NS/PS/TS) PS - PAST SHEET
NS - NEXT SHEET
TS - THIS SHEET

HENCE [PS - 12] DENOTES LOCATION ON PAST SHEET LINE 12. OTHER LOCATIONS ARE DENOTED BY SHEET NUMBER AND LINE, E.G. [1A16] SIGNIFIES LOCATION ON SHEET 1A, LINE 16 ETC.

NOTE: FIELD EFFECT TRANSISTOR: THE CLOSED/OPEN (I/O) STATE OF THESE SWITCHED FOR "PRECONDITION" - "RUN" OR JOG" - "DIAGNOSTIC STATIC" - "DIAGNOSTIC RUN" IS SHOWN BY A FOUR DIGIT WORD WITH STATE SEQUENCE.

▲ THESE RESISTORS ARE CRIMPED IN WIRE HARNESS

FIT 50Hz JUMPERS (& 0.0047 μF CAPACITORS) FOR 50Hz UK. TEST. REMOVE AND FIT 60Hz JUMPERS FOR INSTALLATION IN USA. (0.0047 μF CAPACITORS MUST BE REMOVED FOR 60Hz)

DR | SH 1 | CONTD. 2 | ELEMENTARY DIAGRAM 902M122RC

TECHN.	ENG.	APPD.	TECHN.	ENG.	APPD.	DATE
NGM			FRS			14/10/80

4 SEE SHEET 9 11/8/81 — 2 SEE SHEET 9 17/2/81 — TECHN. — ENG. FRS — APPD. ASH

ALLENWEST Simplex VARIABLE SPEED DRIVES OPERATION, BRIGHTON, ENGLAND.

50 HP, BDC 3034R (KEIGHLEY GRINDERS)

GO NUMBER	ELEMENTARY DIAGRAM	CONTD.
132N00	902M122RC	2

IDENT — DR — SH 1

Disclaimer Statement The trade mark is the trade mark of General Electric Company of U.S.A., which is not connected with the English Company of a similar name.

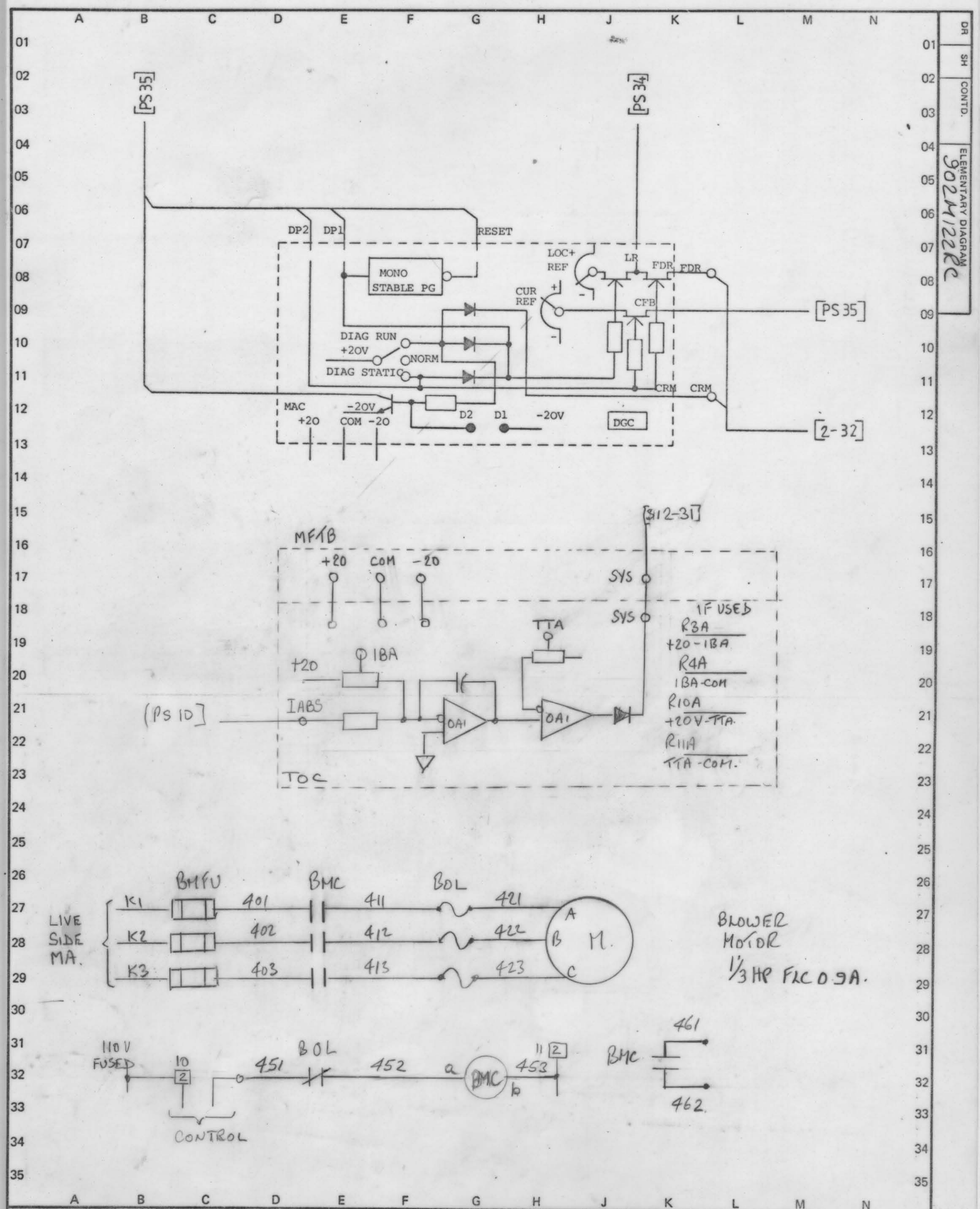

TECHN.	ENG.	APPD.	TECHN.	ENG.	APPD.	DATE 14.10.80	ALLENWEST Simplex VARIABLE SPEED DRIVES OPERATION, BRIGHTON, ENGLAND.	50 HP 3034R	IDENT. DR SH
						TECHN.			
						ENG. F.J.S.		GO NUMBER 027N14 / ELEMENTARY DIAGRAM 902M122RC / CONTD. S	4
						APPD.			

Disclaimer Statement The trade mark is the trade mark of General Electric Company of U.S.A., which is not connected with the English Company of a similar name.

DR	SH	CONTD.	ELEMENTARY DIAGRAM
	5	6	902M122RC

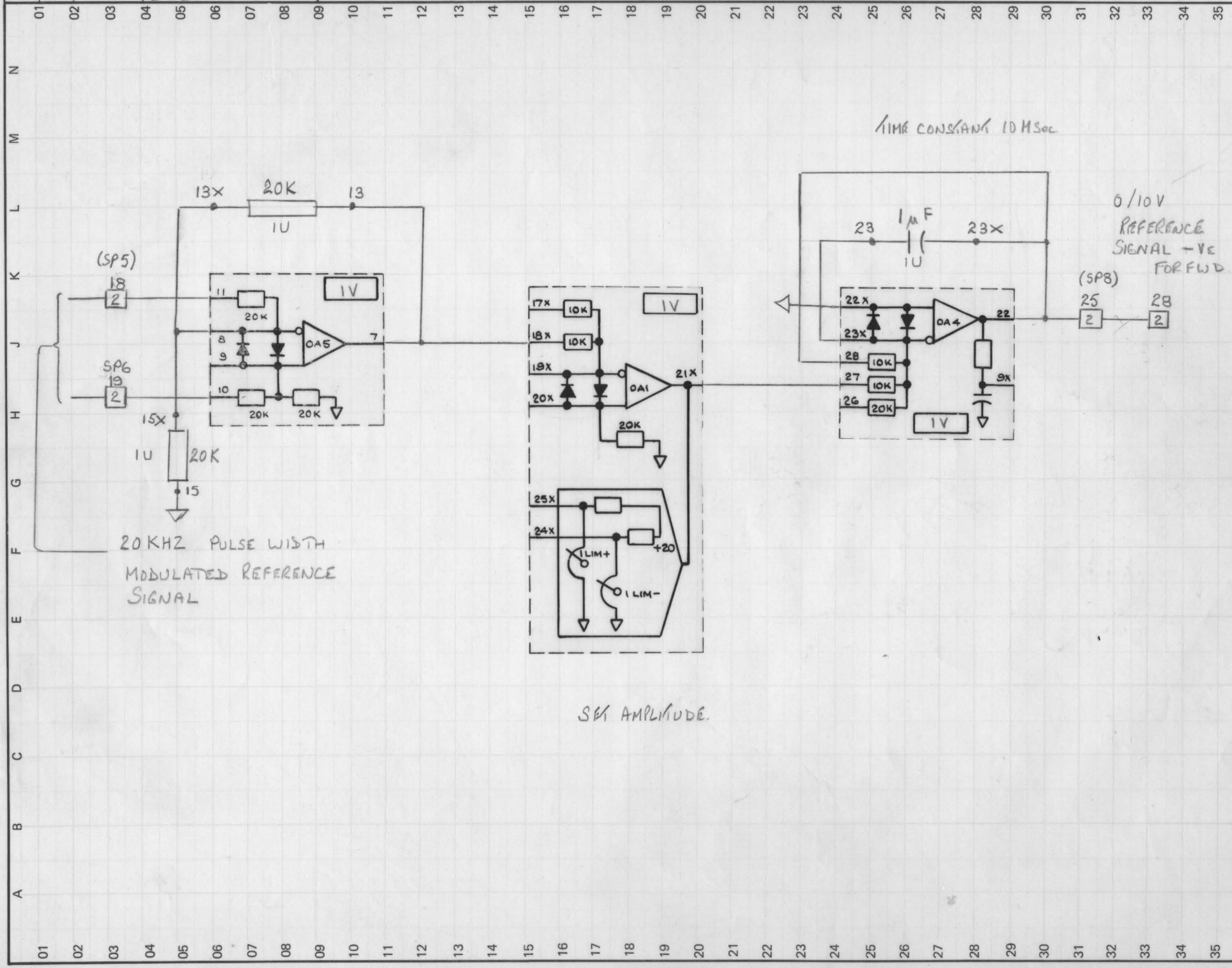

IDENT

DR SH 5

BDC 3034R 50 HP
REFERENCE CIRCUIT

CONTD. 6

GO NUMBER 027N14

ELEMENTARY DIAGRAM 902M122RC

ALLENWEST

simplex

VARIABLE SPEED
DRIVES OPERATION,
BRIGHTON, ENGLAND.

TECHN.	ENG.	APPD.	TECHN.	ENG.	APPD.	DATE 11.11.80	TECHN.	ENG.	APPD.

Disclaimer Statement The trade mark is the trade mark of General Electric Company of U.S.A., which is not connected with the English Company of a similar name.

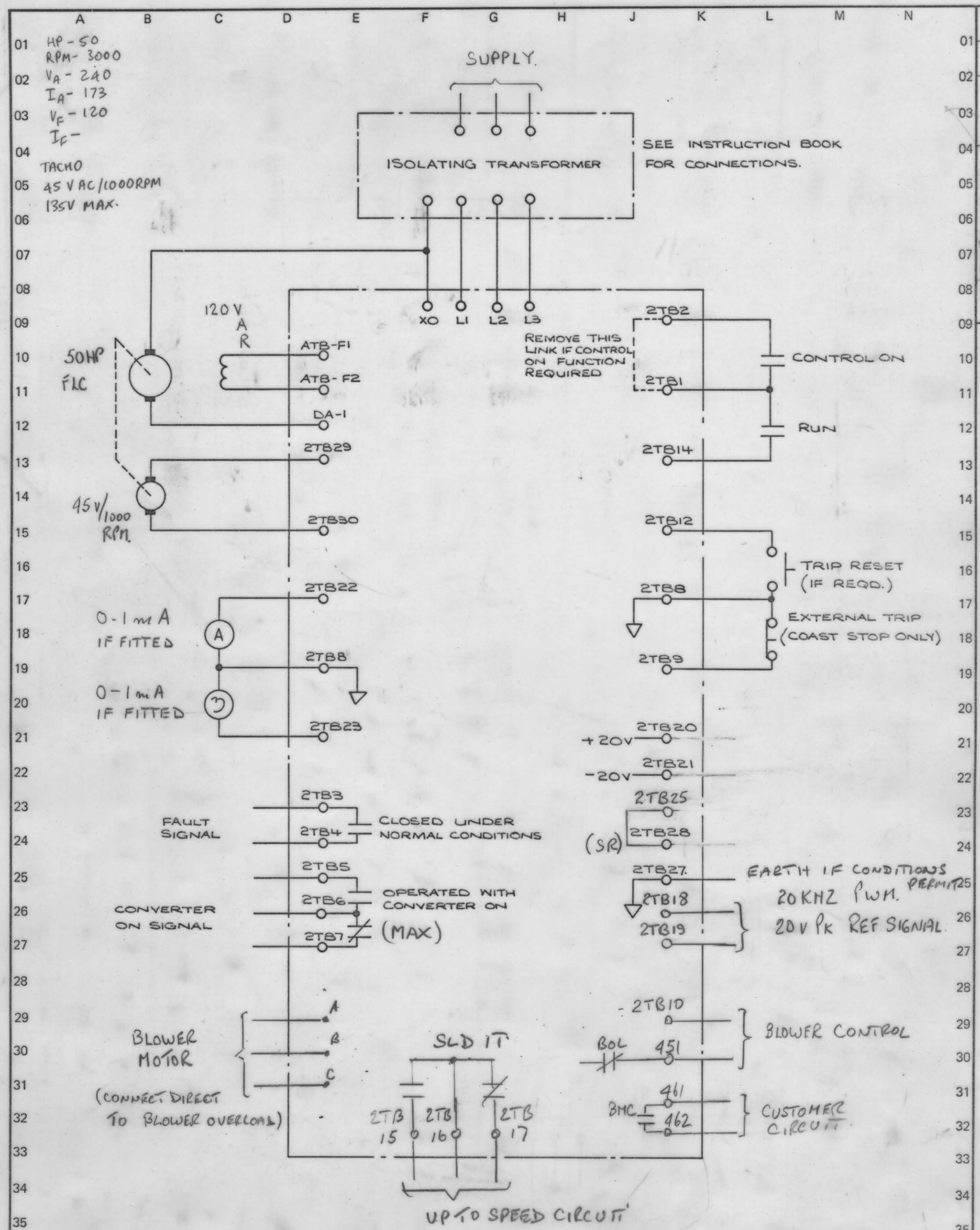

TECHN.	ENG.	APPD.	TECHN.	ENG.	APPD.	DATE 14·10·60				
			3			TECHN.	ALLENWEST Simplex VARIABLE SPEED DRIVES OPERATION, BRIGHTON, ENGLAND.	50 HP 3034 R	IDENT	
					15.4.81	ENG. F.D.			DR	SH 8
						APPD.		GO NUMBER 027N14	ELEMENTARY DIAGRAM 902M122RC	CONTD. 9

DR SH CONTD. ELEMENTARY DIAGRAM 902M122RC.

Disclaimer Statement The trade mark is the trade mark of General Electric Company of U.S.A., which is not connected with the English Company of a similar name.

DR	SH	CONTD.	ELEMENTARY DIAGRAM
	10	—	902M122RC

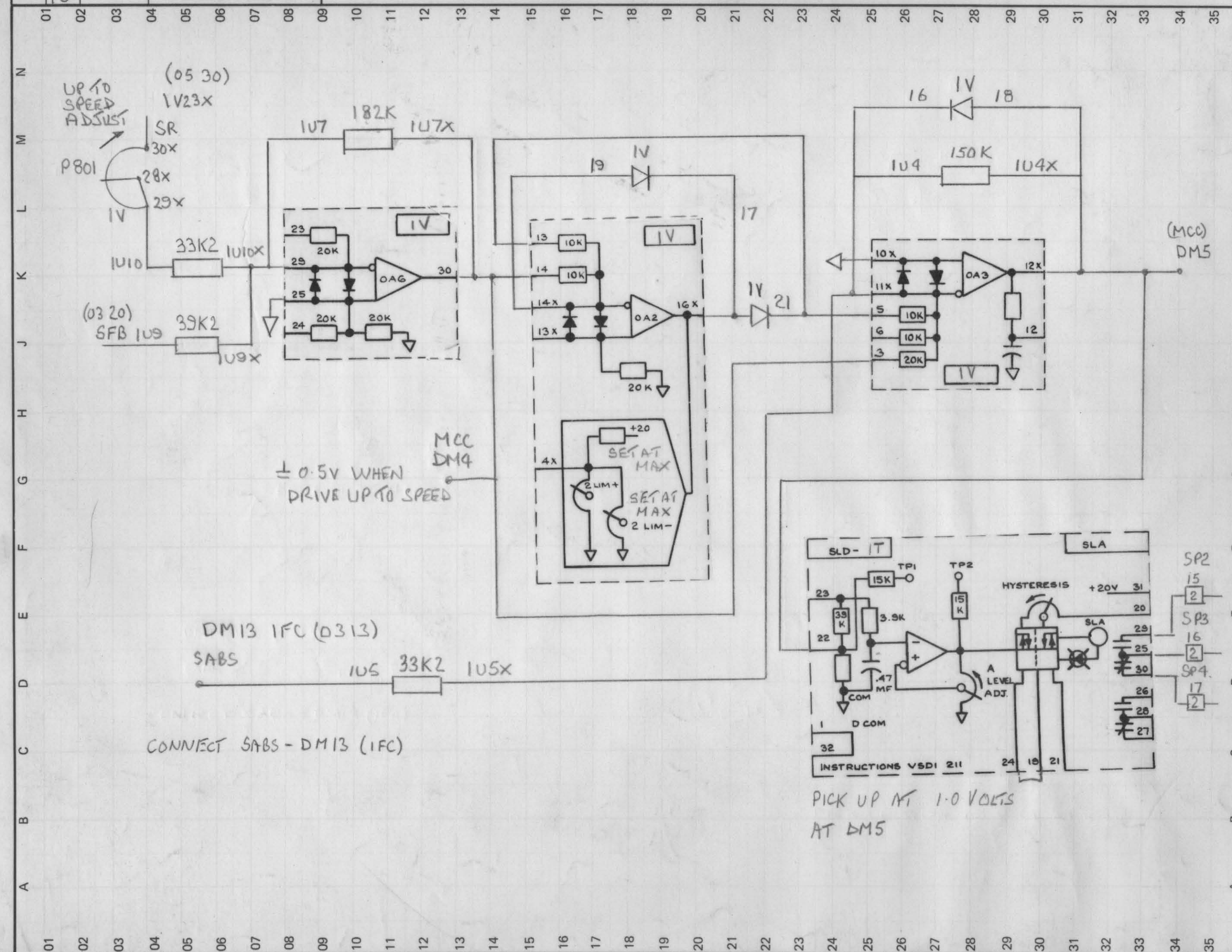

IDENT

DR SH 10

50 HP 3034R
KEIGHLEY GRINDERS
UP TO SPEED CIRCUIT

CONTD. —

GO NUMBER D27N14

ELEMENTARY DIAGRAM 902M122RC

ALLENWEST

Simplex

VARIABLE SPEED DRIVES OPERATION, BRIGHTON, ENGLAND.

DATE 15·4·81	TECHN.	ENG.	APPD.
3			

TECHN. ENG. APPD. TECHN. ENG. APPD.

Disclaimer Statement The ® trade mark is the trade mark of General Electric Company of USA, which is