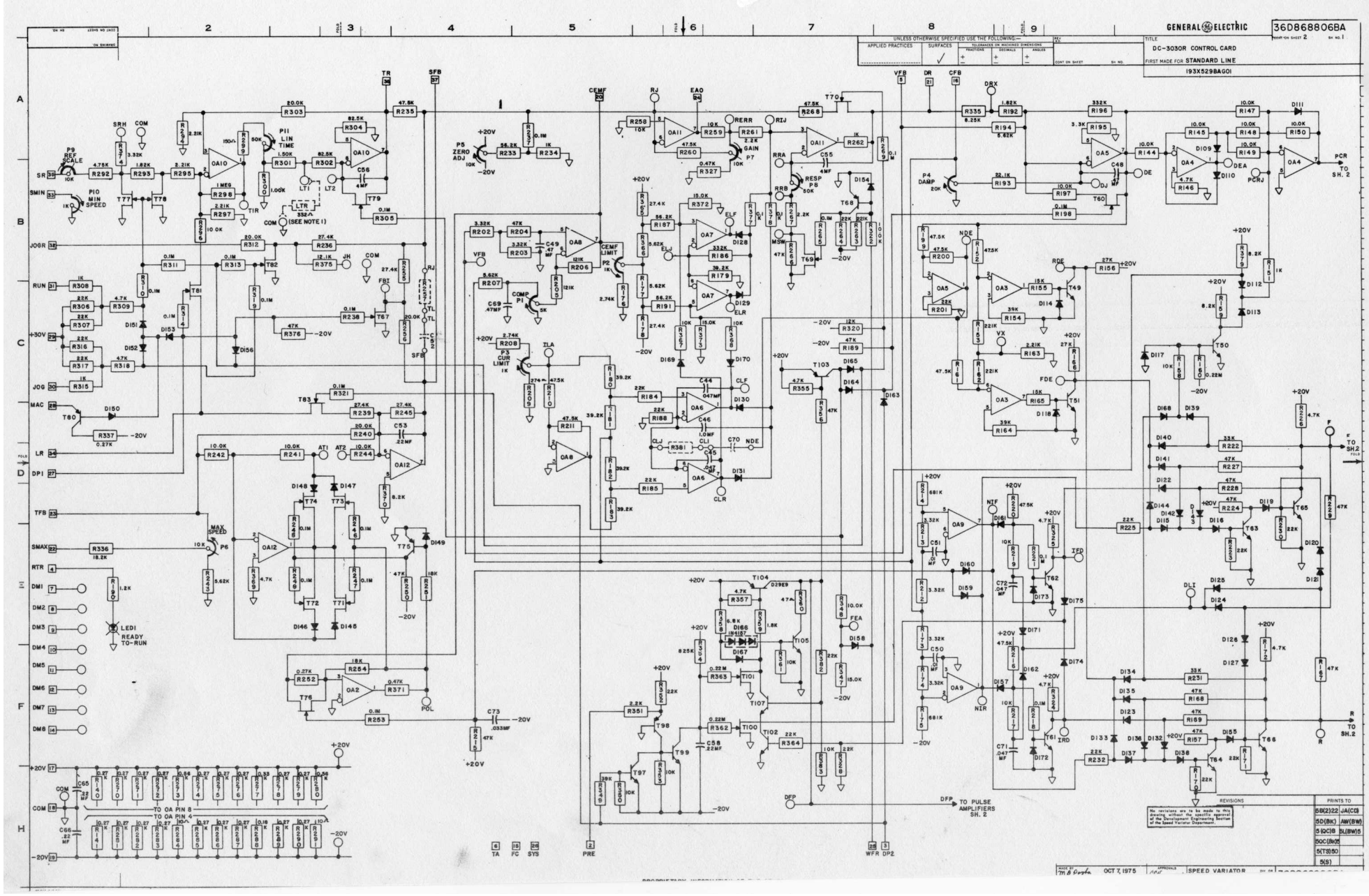
GENERAL ELECTRIC
36D868806BA
UNLESS OTHERWISE SPECIFIED USE THE FOLLOWING:
APPLIED PRACTICES
SURFACES
TOLERANCES ON MACHINED DIMENSIONS
FRACTIONS
DECIMALS
ANGLES
TITLE
DC-3030R CONTROL CARD
FIRST MADE FOR STANDARD LINE
193X529BAG01
REVISIONS
No revisions are to be made to this drawing without the specific approval of the Development Engineering Section of the Speed Variator Department.
PRINTS TO
5B(2)22 JA(CD)
5D(BK) AW(BW)
5(QC)B SL(BW)5
5QC(BK)5
5(TS)50
5(S)
OCT 7, 1975
SPEED VARIATOR
TO PULSE AMPLIFIERS SH. 2
TO OA PIN 8
TO OA PIN 4
LED1 READY TO-RUN
P9 REF SCALE
P10 MIN SPEED
P11 LIN TIME
P5 ZERO ADJ
P4 DAMP
P3 CUR LIMIT
P6 MAX SPEED
P7 GAIN
P8 RESP
P2 CEMF LIMIT
P1 COMP
PCR TO SH. 2
F TO SH. 2
R TO SH. 2
DFP
TA
FC
SYS
PRE
WFR
DP2

GENERAL ELECTRIC

36D868806BA

CONT ON SHEET SH NO 2

UNLESS OTHERWISE SPECIFIED USE THE FOLLOWING—

APPLIED PRACTICES	SURFACES	TOLERANCES ON MACHINED DIMENSIONS: FRACTIONS	DECIMALS	ANGLES
	✓	±	±	±

REV NO 01

CONT ON SHEET SH NO

TITLE

DC-3030R CONTROL CARD

FIRST MADE FOR STANDARD LINE

193X529BA G01

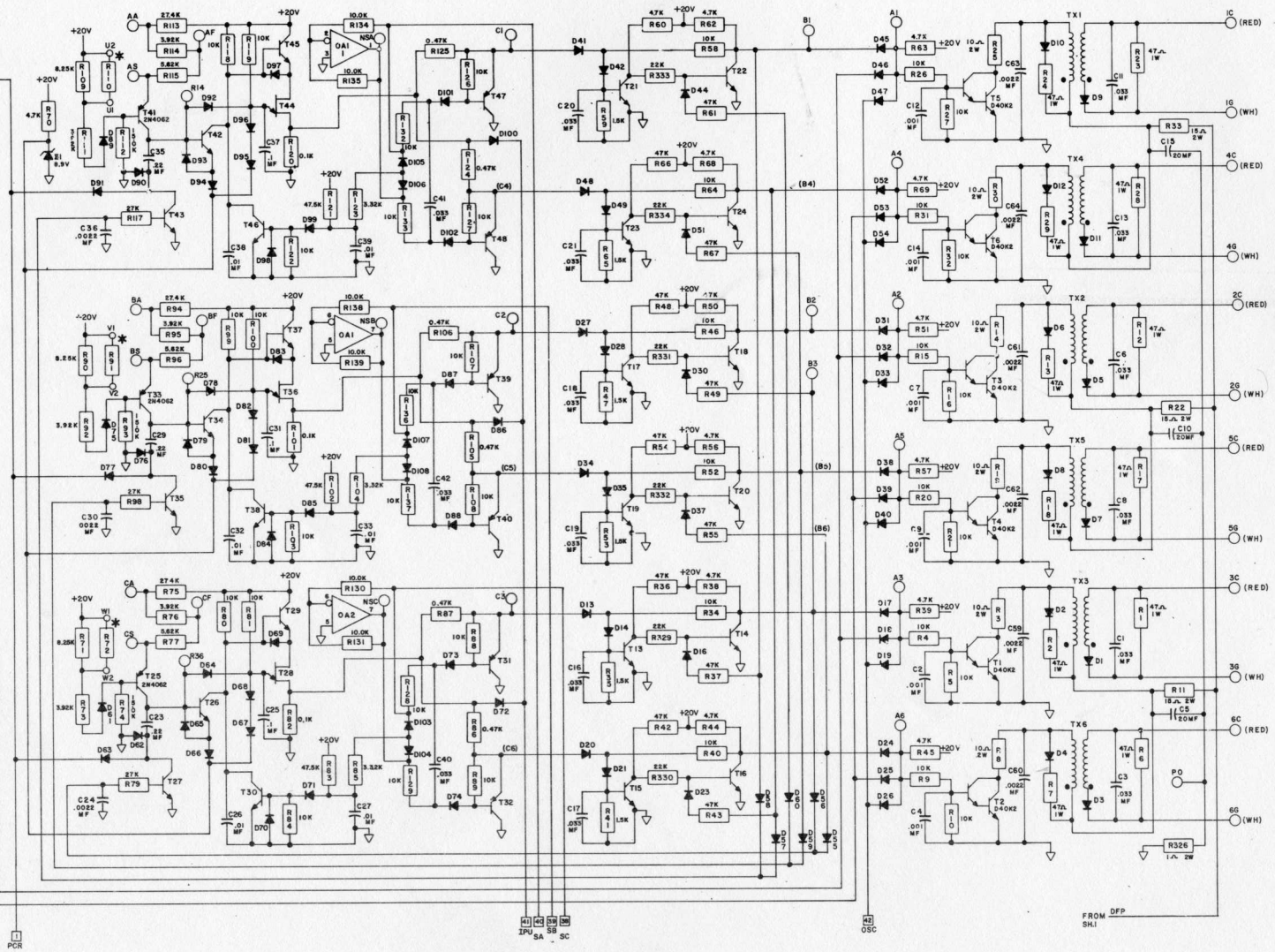

JUMPER CONNECTIONS

THIS CARD IS WIRED AT ASSEMBLY WITH THE JUMPER CONNECTIONS SHOWN BELOW. THESE MAY BE RECONNECTED OR REMOVED AND OTHER JUMPERS ADDED. REFER TO SYSTEM ELEMENTARY FOR JUMPER LOCATIONS.

AA-AS BA-BS CA-CS (60HZ)

SRH-COM AT1-AT2 JH-COM (AC TACH) (HIGH REFERENCE RANGE)

SYMBOLS

* -COMPONENTS SELECTED IN TEST

□ -TB FINGER

○ -CONTACT PIN

[ ] -COMPONENTS SHOWN DOTTED WILL BE FURNISHED ONLY WHEN REQUIRED. C52 AND R257 WILL PROVIDE A TACHOMETER RATE NETWORK, AND C70 AND R381 WILL CONTROL THE RATE OF RISE OF CURRENT. REFER TO THE SYSTEM ELEMENTARY FOR FURTHER INFORMATION.

THE NOMENCLATURE IS DEFINED IN THE ENGINEERING SPECIFICATION AND THE INSTRUCTION BOOK.

EXCEPT AS NOTED ALL NPN TRANSISTORS ARE 2N4424 AND ALL PNP TRANSISTORS ARE 2N5366.

NOTE

1. 332Ω RESISTOR LTR FROM LT1 TO COM FOR 2-60 SEC. LINEAR TIMING RANGE.

REVISIONS			PRINTS TO	
1	JAN 22, 1977	SV-B69 #9	5B(2)22	JA(CD)
			5D(BK)	AW(BW)
			5(QC)8	5L(BW)5
			5QC(BK)5	
			5(TS)50	
			5(S)	

No revisions are to be made to this drawing without the specific approval of the Development Engineering Section of the Speed Variator Department.

MADE BY M. B. Pagha OCT. 9, 1975

DRAWN Fred Monk Oct. 8, 1976

APPROVALS

SPEED VARIATOR

ERIE, PA

DIV OR DEPT

LOCATION

36D868806BA

CONT ON SHEET SH NO 2

PROPRIETARY INFORMATION OF THE GENERAL ELECTRIC COMPANY

ZONE	LTR	REV	DESCRIPTION	DATE	APPROVED
		1	J.H. Baker ADDED DISTRIBUTION, ETCHING NO-S AND MAX. COMPONENT HEIGHT SK.	11/9/72	

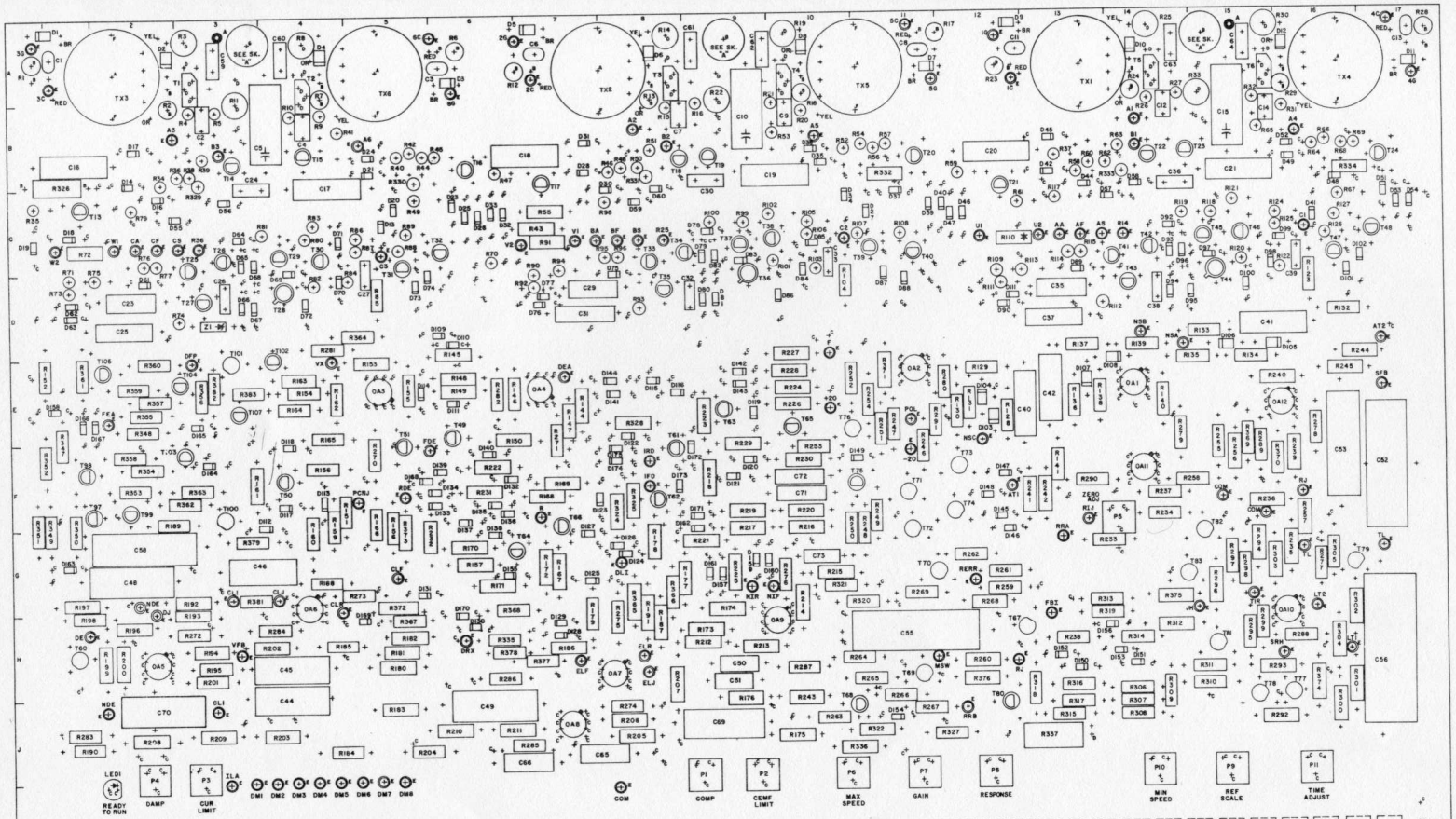

HOLE TABULATION

ALL HOLES DAO DIA. EXCEPT THE HOLES TABULATED BELOW

LOC.	DIA.	QUAN.
A	.157	8
B	.052	26
C	.032	583
D	.062	38
E	.070	107
F	.128	54
G	.187	3

1. CARD SIZE, 10.000 X 17.000

TRANSISTOR LEAD SKETCHES

(TOP VIEW) EMITTER COLLECTOR BASE
SKETCH FOR T25, T33, T41, T63, T105

(TOP VIEW) COLLECTOR EMITTER BASE
SKETCH FOR T16, T20, T24, T62, T66, T88

(TOP VIEW) COLLECTOR BASE EMITTER
SKETCH FOR T26, T30, T34, T38, T42, T46, T61, T80

(TOP VIEW) BASE COLLECTOR EMITTER
SKETCH FOR T49, T50, T51, T97, T98

(TOP VIEW) BASE EMITTER COLLECTOR
SKETCH FOR T27, T32, T35, T40, T43, T48, T99

(TOP VIEW) COLLECTOR BASE EMITTER
SKETCH FOR T4, T18, T22, T80, T104, T107

(TOP VIEW) EMITTER BASE COLLECTOR
SKETCH FOR T13, T15, T17, T19, T21, T23, T31, T39, T47, T64, T75, T103

(TOP VIEW) COLLECTOR EMITTER BASE
SKETCH FOR T29, T37, T45, T102

SCREW, SPACER, CIRCUIT BOARD, FLAT WASHER, NUT, SPACER, STUD
SKETCH "A"

COMPONENT HEIGHT SKETCH TRANSISTOR (SIDE VIEW) (SIDE VIEW)
.50 INCHES MAX.
CIRCUIT BOARD

(TOP VIEW) GATE DRAIN SOURCE
SKETCH FOR T60, T77, T100, T101

(TOP VIEW) DRAIN GATE SOURCE
SKETCH FOR T69, T70, T71, T72, T73, T74, T76, T78, T79, T81, T82, T83

(TOP VIEW) DRAIN SOURCE GATE
SKETCH FOR T67

(TOP VIEW)
SKETCH FOR OA1, OA2, OA5, OA6, OA7, OA8, OA9, OA10, OA11, OA12

(TOP VIEW)
SKETCH FOR OA3, OA4

(TOP VIEW) BASE COLLECTOR EMITTER
SKETCH FOR T1, T3, T5

(TOP VIEW) COLLECTOR EMITTER BASE
SKETCH FOR T2, T4, T6

(TOP VIEW) BASE 2 BASE 1 EMITTER
SKETCH FOR T28, T36, T44

PRINTS TO	
5L(BW)5	5(S)
50C(BK)5	5(TS)50
AW(BW)	5(QC)8
JA(CD)	50(BK)
DS(REP)	58(2)22
5AE(BW)	

X	36C774068AB005	36C774069AB005		
SCALE	REAR ETCHED BOARD DWG.	FRONT ETCHED BOARD DWG.	FRONT	BACK
		SPACE UNIT REQUIREMENT		

UNLESS OTHERWISE SPECIFIED DIMENSIONS ARE IN INCHES— TOLERANCES ON 2-PLACE DECIMALS ± 3-PLACE DECIMALS ± ANGLES ± FRACTIONS ± MATERIAL—

ALL SURF. ✓

SIGNATURES
DRAWN D. Ruppe 30 7 75
CHECKED
TRACED J. Bernal 9 30 76
ENGR. F.K.
DATE
CODE

No revisions are to be made to this drawing without the specific approval

GENERAL ELECTRIC
SPEED VARIATION DEPT. LOC., ERIE, PENNA., U.S.A.

CONTROL CARD

COMPONENT DIAGRAM

SIZE E | CODE IDENT NO. | 36C764160BA